SVL-4023
FANUC OPERATION MANUAL

Chapter 1 SAFETY

1.1 Safety Precautions 10
1.2 Warning Labels 10
1.3 Utilization Of Safety Device 15
1.4 Warning Lists 16

Chapter 2 Preparations For Installation

Overview 21
1. Preparation Of Set-up Area 23
2. Preparation Of Transport Route 25
3. Preparation Of Transportation Equipment 26
4. Set-up Conditions 27
5. Air/Power Sources 28
6. Recommended Foundations 30

Chapter 3 OPERATION

Before Starting Operation / Operation Flowchart 34
1. Main Operation Panel 35
1.1 Main Operation Panel Functions 35
1.2 LCD Control Panel Functions 55
2. M_CODE 59
2.1 M-code List 59
3. Setting/Changing Machine Parameters 61
4. Opening / closing Doors 65
4.1 Opening / closing Splashguard Door 65
5. Turning On/Off Power Supply 68
6. Data Registration / Editing 71
6.1 NC Program Registration (3 Methods) 71
6.2 Tool Offset Registration 71
6.3 Tool Offset Value 74
6.4 Registration Of Workpiece Offset Value 75
7. Workpiece Setting 79
1. Workpiece Attachment And Detachment 79
2. Workpiece Restrictions 80

8. Tool Preparations 81
8.1 Tool Attachment and Detachment 81
8.2 Tool Storage Limitations 82
8.3 Tool And Retention Stud Combinations 82
9. Tool Change 86
10. Cutting Fluid Supply 87
11. Chip Disposal 88
11.1 Operation Of Lift-Up Conveyor 89
12. Automatic Operation 90
1. Program Edit Procedure 90
2. Program Configuration 92
3. Subprogram Call 94
4.Major Function And Address 96
5. Force Mirror Image 97
6. Program Edit 98
7. Add New Program 98
8. Delete Program 99
9. Program commanded Search 100
10. Edit key 101
11. Copy Program 106
12. Graphic Function 112

Chapter 4 PROGRAMMING

1. Commanded Description 118
1.1 G Commanded 118
1.2 F Commanded 124
1.3 S Commanded 124
1.4 T Function 127
1.5 G Code Composition 127

Chapter 5 PROGRAM INPUT / OUT OPERATION

1. Memory Card Operation
1.1 Displaying The Directory 208
1.2 Searching for a File 209
1.3 Deleting A File 210
1.4 DNC Operation 211
1.6.1 Searching for a File 211
2 . Data Input/Output On The All I/O Screen 212

Chapter 6 CUTTING TOOL CONDITION LIST

1. Cutting Tools use Description 214
1.1 Face Mill 214
1.2 End Mill 215
1.3 Boring Bar 216
1.4 Drill 217
1.5 Reamer 218
1.6 Tap 219

Chapter 7 PARTS MANIUL

1. Spindle head 221
2. Column 225
3. Base 228
4. Saddle & Table 231
5. Lubrication 235
7.1 Saddle Distributor 236
7.2 Spindle Distributor 237
7.3 Table Distributor 238
7.4 Telescopic Cover 239
7.5 List of recommended lubricants for parts 241
6. Spindle 242
7. Magazine 249
1. Main body 251
2. Cylinder mounting plate 252
3. Tooldisk 254
4. Arm Body 255
5. Cam box 257
8. Pneumatic system 263

Chapter 8 APPENDIX

1. Replacing fuse on control unit 269

2. Replacing battery 271
2.1 When a lithium battery is used - Replacement procedure 272
2.2 When alkaline dray cells (size D) are used 275
– Replacing the battery
2.3 Battery for separate absolute pulse coder (6VDC) 276
2.4 Battery for absolute pulse coders Built into the built Motor 277
(6VDC)
3. Replacing fan unit_ 277
3.1 Replacement procedure 278
4. High Speed High Accuracy Machining Control Function 279
4.1 AI Advanced Preview Control (AI-APC) 279
4.2 AI NANO Contour Control (AI NANO CC) 280
4.3 AI NANO High Precision Contour Control 281
(AI NANO HPCC) (Optional Function)

4.4 Conditions for High Speed High Accuracy Control 283
5. Rotary table Interface Install Description
5.1 Interface Detail 284
5.2 Parts Description 285
5.3 Terminal Block Input Wires 286
5.4 Operation 287
6. Tool Setter Probe Install 289
7. Big Function Setting Procedure 307

MACHINE TYPE _____

MACHINE SERIAL # _____

CONTROL TYPE _____

ALL RIGHTS RESERVED . NO PART OF THIS DOCUMENT MAY BE REPRODUCED, COPIED, OR MODIFIED IN ANY FORM OR ANY MEASNS WITHOUT DIRECT PERMISSION OF **SHARP MILLING MACHINES**.

ALL SPECIFICATIONS AND DESIGNS ARE SUBJEC TO CHANGE WITHOUT NOTIFICATION.

INTRODUCTION

This manual is for this vertical machining center

Read this manual prior to beging any maintenance or repair work .
Follow the intructions provided in this manual to ensure the safty of those maintaining or repairing this machine .
Disregarding or not following the specific directions in this manual may lead to serious Injury or death .

IMPORTANT NOTICE

1. Read and undertant Chapter "1. SAFETY " prior to machine operation to ensure safe working Conditions.

2. Designate specific operators for this machine to ensure optimum machine perfrmance and safety standards are maintained at all times .

3. Keep this manual in a clearly marked location to ensure Easy access when necessary .

4. Contact the regional SHARP office or local distributor if this manual is lost or damaged .

5. Reproduction of this manual in part or in its entirety is prohibited by SHARP .

6. Ensure this in included when moving or reseling this machine .

7. All spcifications and designs are subject to change without prior notification .

SYMBOLS IN THIS MANUAL	
STOP	Supplementary expianations
!	Explains operation erros that will cause Alarme or stop the machine .
	Explains convenient functions to be used during operations .
☞	Indicates reference items, figures and tables providing futher information

Chapter 1 SAFETY

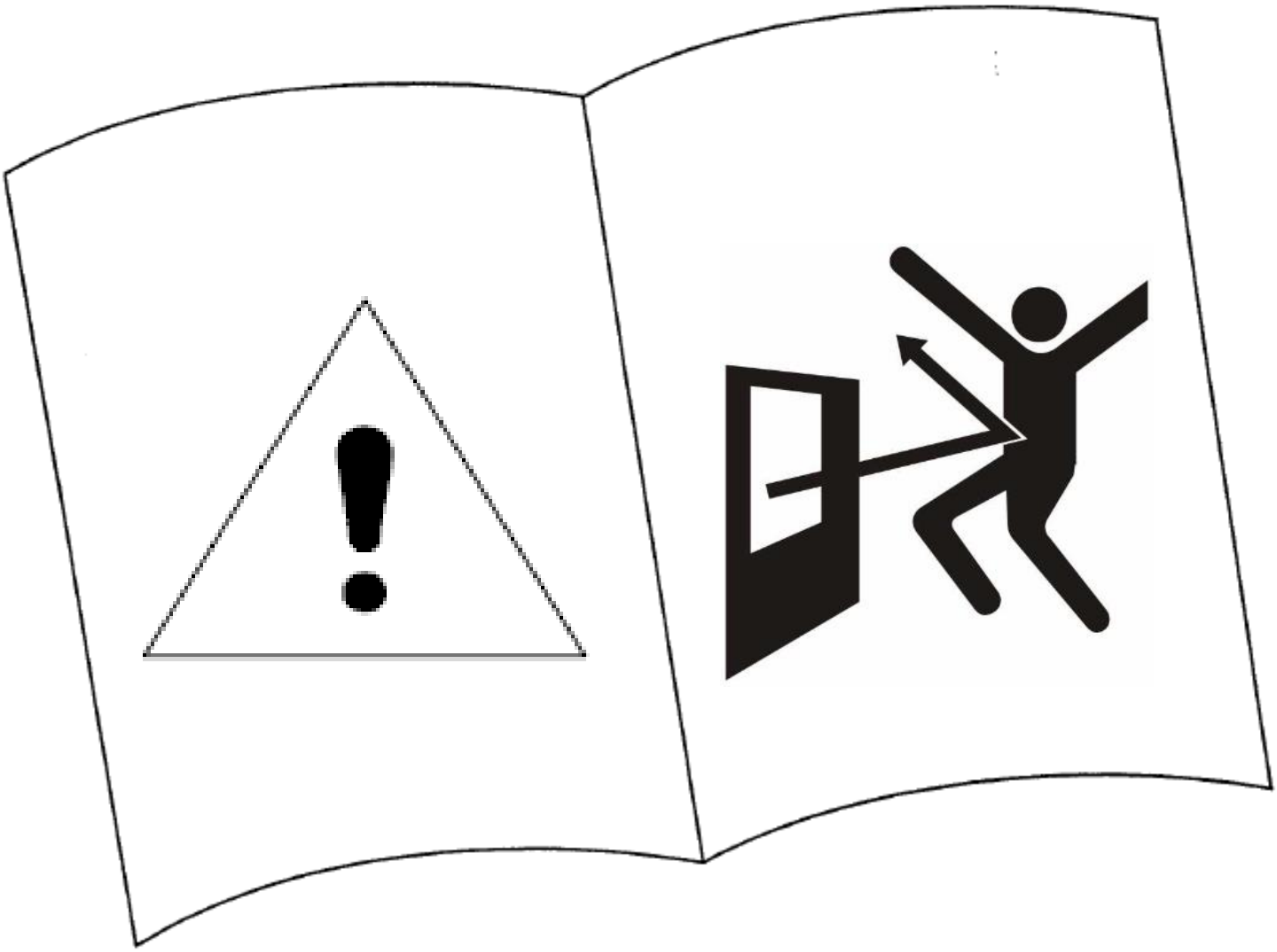

1.1 Safety Precautions

Safety precautions and special considerations relevant to all machining operations must be thoroughly understood by the operator prior to machine operation . Careless use of the machine may result in serious Injury and machine damage .

1.2 Warring Labels

The warring labels attached to machine at specific points identify safety risks and provide important instructions that must be followed (☞ Figu re 1.1 ~ Figure 1.5)

Warning labels are divided into 3 categories according to

levels of caution required (☞ Table 1.1)

Table 1.1 DANGER / WARNING STATEMENTS

⚠ DANGER	Failure to heed this warning will Lead to death or serious injury .
⚠ WARNING	Failure to heed this warning may cause working conditions Lead to death or serious injury .
⚠ CAUTION	Failure to heed this warning may cause working conditions Lead to minor injury or machine damage

STOP Order new labels from the nearest sales office and affix in original position after the following：

- When the warning labels peel off
- When the warning labels become illegible
- When the parts on which the warning labels are attached are replace .

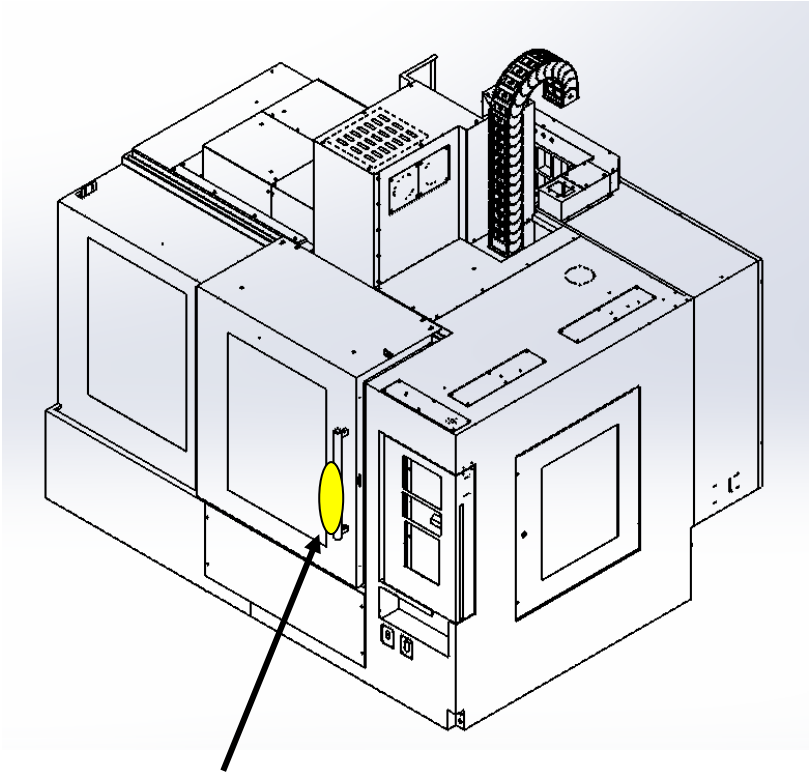

Figure 1.1 LOCATION OF WARNING LABEL

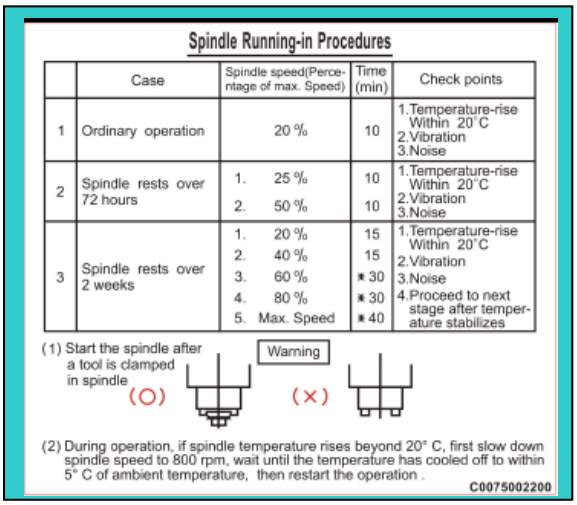

Spindle Running-in Procedures

	Case	Spindle speed(Percentage of max. Speed)	Time (min)	Check points
1	Ordinary operation	20 %	10	1.Temperature-rise Within 20°C 2.Vibration 3.Noise
2	Spindle rests over 72 hours	1. 25 % 2. 50 %	10 10	1.Temperature-rise Within 20°C 2.Vibration 3.Noise
3	Spindle rests over 2 weeks	1. 20 % 2. 40 % 3. 60 % 4. 80 % 5. Max. Speed	15 15 * 30 * 30 * 40	1.Temperature-rise Within 20°C 2.Vibration 3.Noise 4.Proceed to next stage after temperature stabilizes

(1) Start the spindle after a tool is clamped in spindle

Warning

(O) (×)

(2) During operation, if spindle temperature rises beyond 20° C, first slow down spindle speed to 800 rpm, wait until the temperature has cooled off to within 5° C of ambient temperature, then restart the operation .

C0075002200

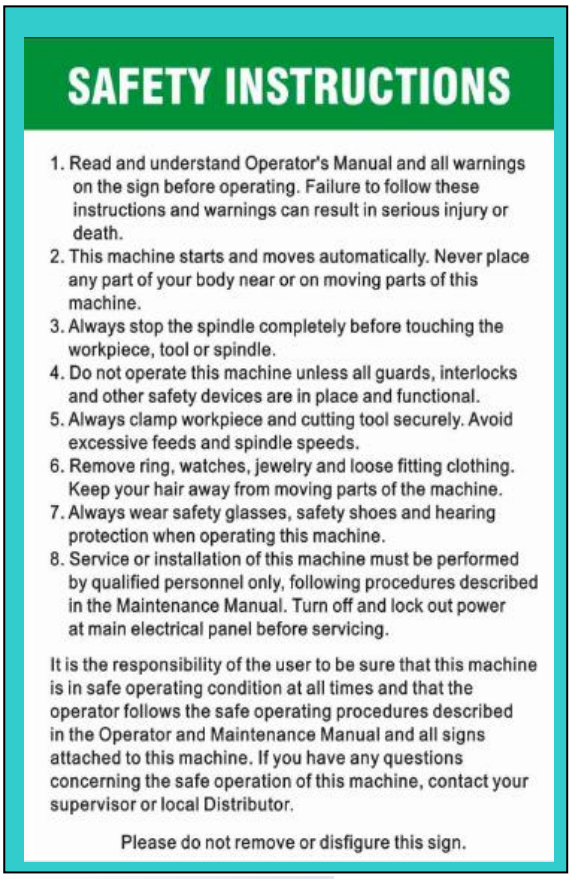

SAFETY INSTRUCTIONS

1. Read and understand Operator's Manual and all warnings on the sign before operating. Failure to follow these instructions and warnings can result in serious injury or death.
2. This machine starts and moves automatically. Never place any part of your body near or on moving parts of this machine.
3. Always stop the spindle completely before touching the workpiece, tool or spindle.
4. Do not operate this machine unless all guards, interlocks and other safety devices are in place and functional.
5. Always clamp workpiece and cutting tool securely. Avoid excessive feeds and spindle speeds.
6. Remove ring, watches, jewelry and loose fitting clothing. Keep your hair away from moving parts of the machine.
7. Always wear safety glasses, safety shoes and hearing protection when operating this machine.
8. Service or installation of this machine must be performed by qualified personnel only, following procedures described in the Maintenance Manual. Turn off and lock out power at main electrical panel before servicing.

It is the responsibility of the user to be sure that this machine is in safe operating condition at all times and that the operator follows the safe operating procedures described in the Operator and Maintenance Manual and all signs attached to this machine. If you have any questions concerning the safe operation of this machine, contact your supervisor or local Distributor.

Please do not remove or disfigure this sign.

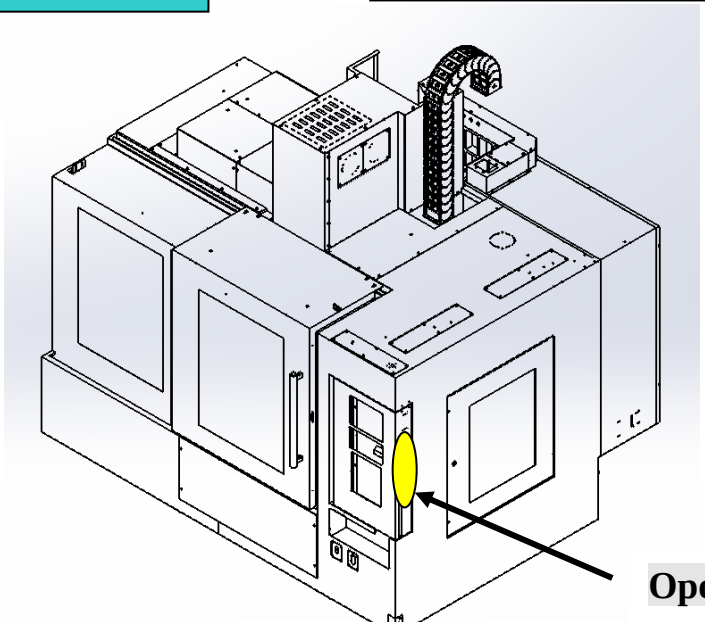

Figure 1.2 LOCATION OF WARNING LABEL

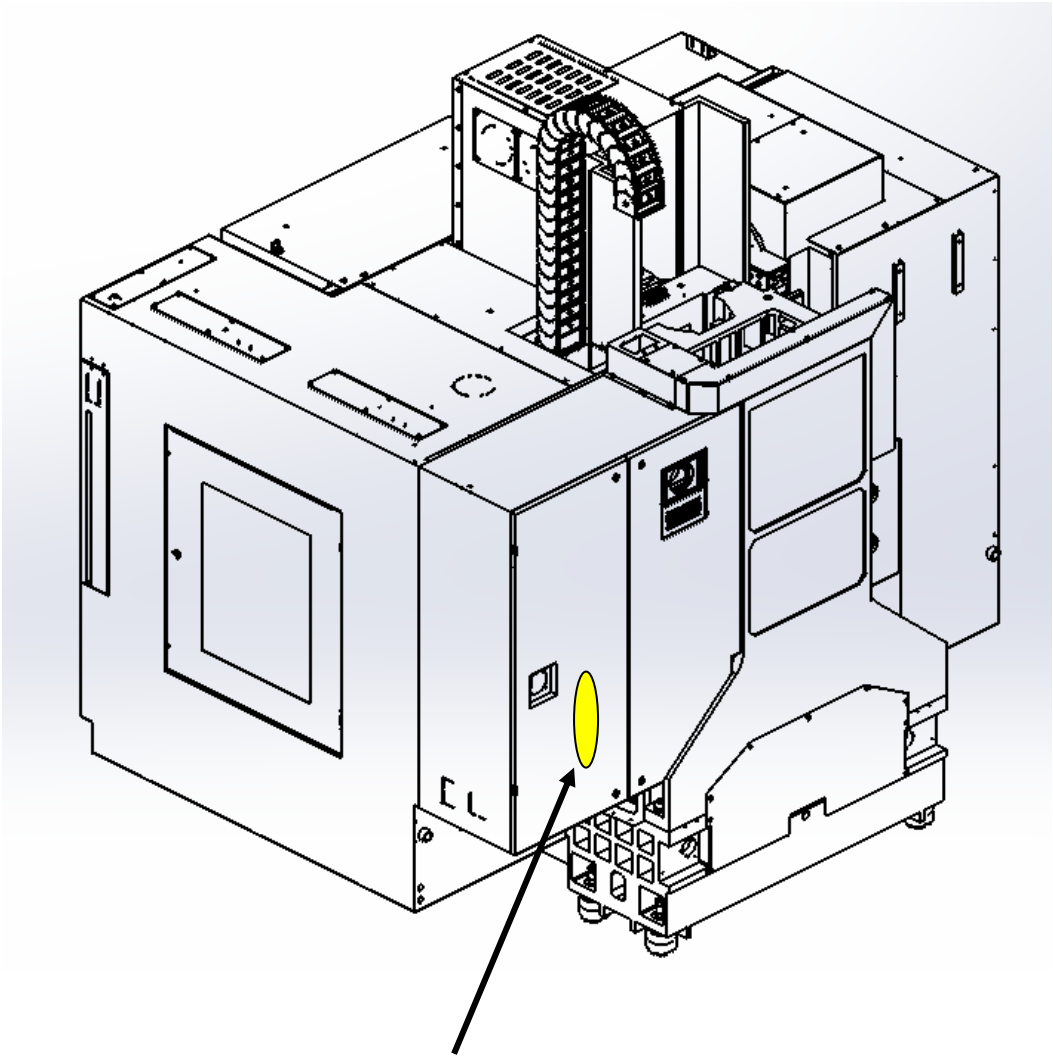

Figure 1.3 LOCATION OF WARNING LABEL

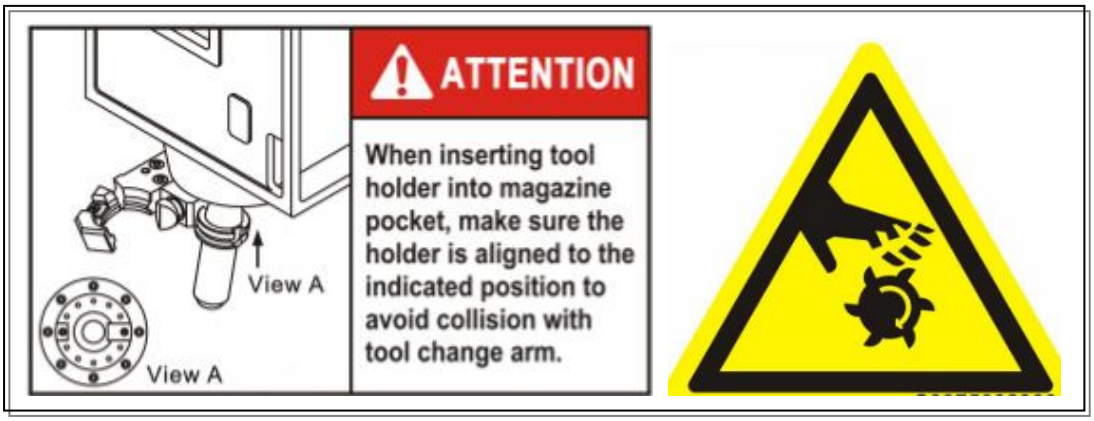

Head cover

Figure 1.4 LOCATION OF WARNING LABEL

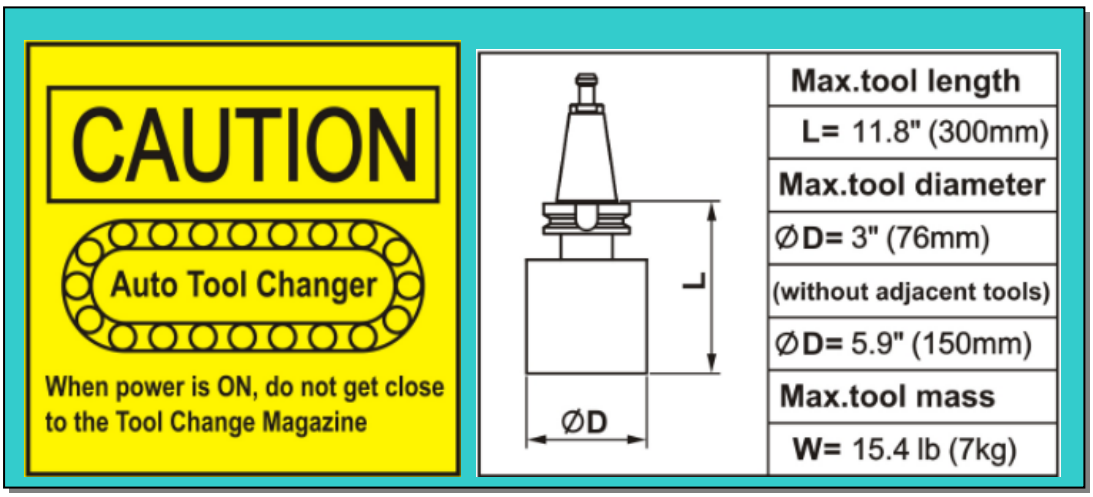

1.3 Utilization of safety devices

Safety devices (☞ Figure 2.1) are installed on this machine in order to protect operators and Maintenance personnel .

⚠ Warning

- Confirm machine safety devices are function correctly at all times .
- If a safety devices is not functioning , or is functioning incorrectly , repair or replace immediately .
- Ensure all operators know the locations of the emergency stop buttons before operating the machine to enable immediately use un abnormal situations or following an accident .
- Never place objects on the safety guards .
- Heed the following safety precautions at all times when operating the machine with guards open：
  - → Do not touch rotating or moving parts .
  - → Do not touch each axis while in motion .
  - → Exercise extreme care around parts that may be about to move .

1.4 Warning lists

The following tables list frequent accidents , incidents and dangerous or careless operating Conditions , and the injuries that may result .
Ensure the contents of each table are thoroughly understood prior to machine operation .

1.4.1Inside of machining chamber

Operations：Centering , alignment , workpiece loading / unloading, changing coolant nozzle, direction, lighting replacement , chip removal, table lubrication, tool attachment /detachment .

ACCIDENT / INCIDENT	PROTENTIAL INJURIES / DAMAGE
Operator touches rotating spindle	Amputation or entanglement of hand(s) resulting in serious injury
Operator touches bladed tools	Cuts , injuries to hands
Operator lifts heavy tools	Strained back
Operator stands on center-trough conveyor or the surrounding splash guard and slips .	Bone fracture
Feed axis moves , trapping operator in machine	Bone fracture
Operator is struck by ATC Arm	Bone fracture
Operator is struck by chips and cutting fluid scattered during machine .	Damage to eyes or cuts / burns to skin
Operator is splashed by cutting fluid dripped from ceiling .	Damage to eyes
Hand(S) caught when closing S/ G door	Bone fracture
Spindle is rotated with a tool incorrectly clamped while door is open .	Injury or death
Spindle is rotated prior to cleaning of tapered section while door is open	Injury or death
Spindle is rotated with a bladed tool incorrectly mounted while door is open .	Injury or death
Unblance tools are rotated at high speed while door is open.	Injury or death

1.4.2Tool Magazine , Tool Magazine Door

Operations：Tool replacement and lubrication

ACCIDENT / INCIDENT	PROTENTIAL INJURIES / DAMAGE
Operator touches bladed tools	Cuts or puncture injuries to hands
Operator lifts heavy tools	Strain back
T-serch or tool change is commanded when tool is incorrectly stored in pot	Injury or death
T-search or tool change is commanded when tool blade is mounted incorrectly .	Injury or death
Operator works on oily floor	Bone facture , injury cause by falling
Operator enters tool magazine without turning OFF machine power	Injury or death
Operator insert hand into tool magazine during operation	Cuts to hands or bone fractures

1.4.3 Cutting Fluid, Chips, Cutting Fluid Supply Unit, and Chip Disposal Unit

Operations：Regular machining , cutting fluid replenishment , tank cleaning , filter replacement .

ACCIDENT / INCIDENT	PROTENTIAL INJURIES / DAMAGE
Operator inhales large quantities of cutting fluid mist .	Respirator organ damage
Insufficient cutting fluid .	Fire
Contact with chemical additives .	Skin damage .
Operator inserts hands into conveyor or tank without Turning OFF machine power	Entanglement of hands resulting in serious Injury .
Operator cleans machine without wearing protective glove .	Cuts or puncture injuries to hands
Filter is replace without prior cleaning	Cuts or puncture injuries to hands
Operator works on top of the machine when anchor bolts are used incorrectly and machine is unstable .	Bone fracture ; injury caused by falling
Contact with cutting fluid .	Skin irritation

1.4.4 Signal lamp

Operations：Signal lamp bulb replacement

ACCIDENT / INCIDENT	PROTENTIAL INJURIES /DAMAGE
Working in elevated locations .	Falling , bone facture

1.4.5 Spindle Coolant Oil

Operations：cleaning

ACCIDENT / INCIDENT	PROTENTIAL INJURIES /DAMAGE
Oil temperature exceeds flashpoint . Flashpoint of spindle coolant oil (VG32)： Approximately 20℃	Fire
Inappropriate operating methods	Fluids may damage eyes or skin or be accidentallyingested or inhaled by operator .

1.4.6 Machine Surrounding Area.

ACCIDENT / INCIDENT	PROTENTIAL INJURIES /DAMAGE
Cables and piping are exposed on the floor .	Falling

1.4.7Electric System.

ACCIDENT / INCIDENT	PROTENTIAL INJURIES /DAMAGE
Operation without turning OFF main power switch .	Electric shock, machine malfunction, abnormal operation, or fire
Improper wiring	Machine malfunction, abnormal operation, or fire
Loosening of screws in terminal block	Machine malfunction, abnormal operation, or fire
Door of machine controller and cover of terminal box are left open .	Electric leak, machine malfunction, abnormal operation, or fire
Damage to cables on floor surrounding the machine	Electric leak, machine malfunction, abnormal operation, or fire

1.4.8 Parameters.

ACCIDENT / INCIDENT	PROTENTIAL INJURIES /DAMAGE
An NC or machine parameter not outline in this manual is change	Serious injury or death, damage to workpiece or machine .

stop

Before performing maintenance on the servo amp, spindle amp, turn off the machine power switch and confirm that the red LED indicator(charged) for each device is extinguished .
High voltage current flows through components inside the terminal box .
High voltage current continues to flow on the primary side of the main power switch even after the switch is turned off .
Electrical current continues to flow to lamps outlets in the machine controller even after the main power switch us turned off .

Chapter 2

PREPARATIONS_FOR_INSTALLATION

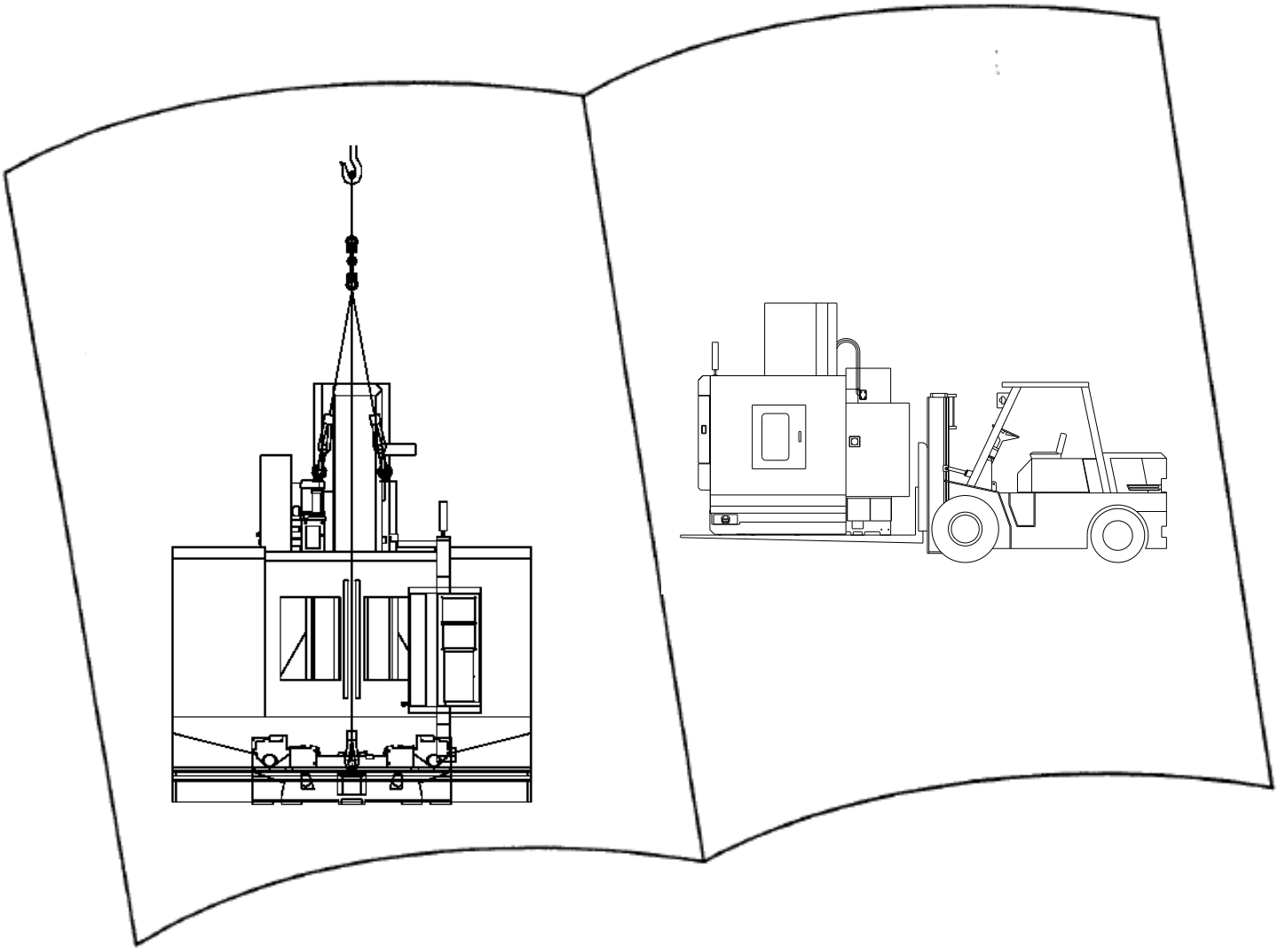

OVERIEW

Prior to machine installation, perform the following preparations to ensure all installation conditions are satisfied ：

Preparation of set-up area .

Preparation of transport route .

Preparation of transportation equipment .

Set-up conditions

Air / power sources

Recommended Foundations

stop

Machine installation is to be performed by specialized personnel only .

1. PREPARATION OF SET-UP AREA

Prior to installation, confirm spacing requirements .
Maintenance area refers to the maintenance space required after installation .

Machine model	A	B	C
SVL-4023	3130mm	2220mm	2300mm

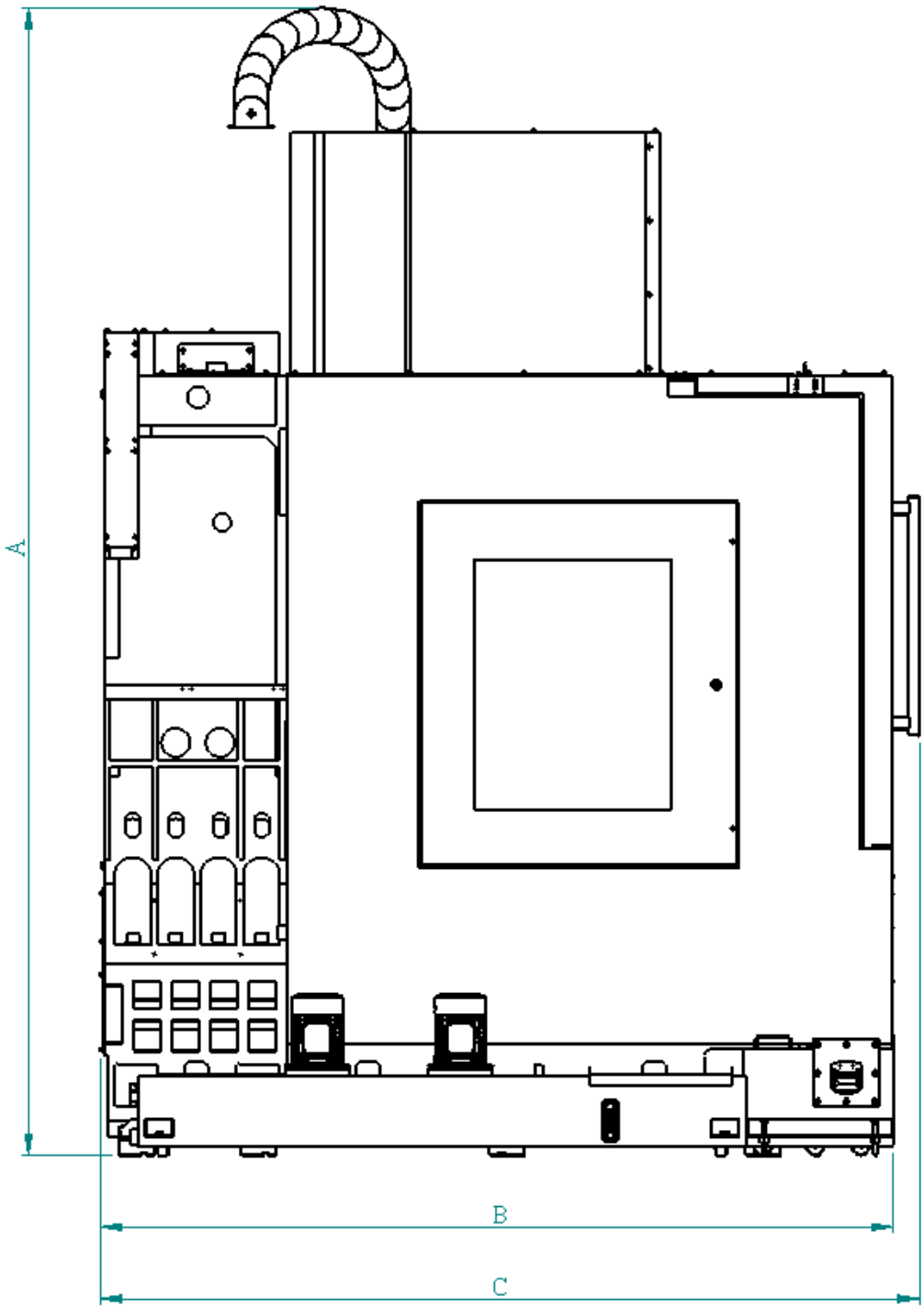

Figure 1.1 SIDE VIEW OF MACHINE

Machine model	A	B	C	D	E
SVL-4023	2790mm	3200mm	2950mm	3435mm	4685mm

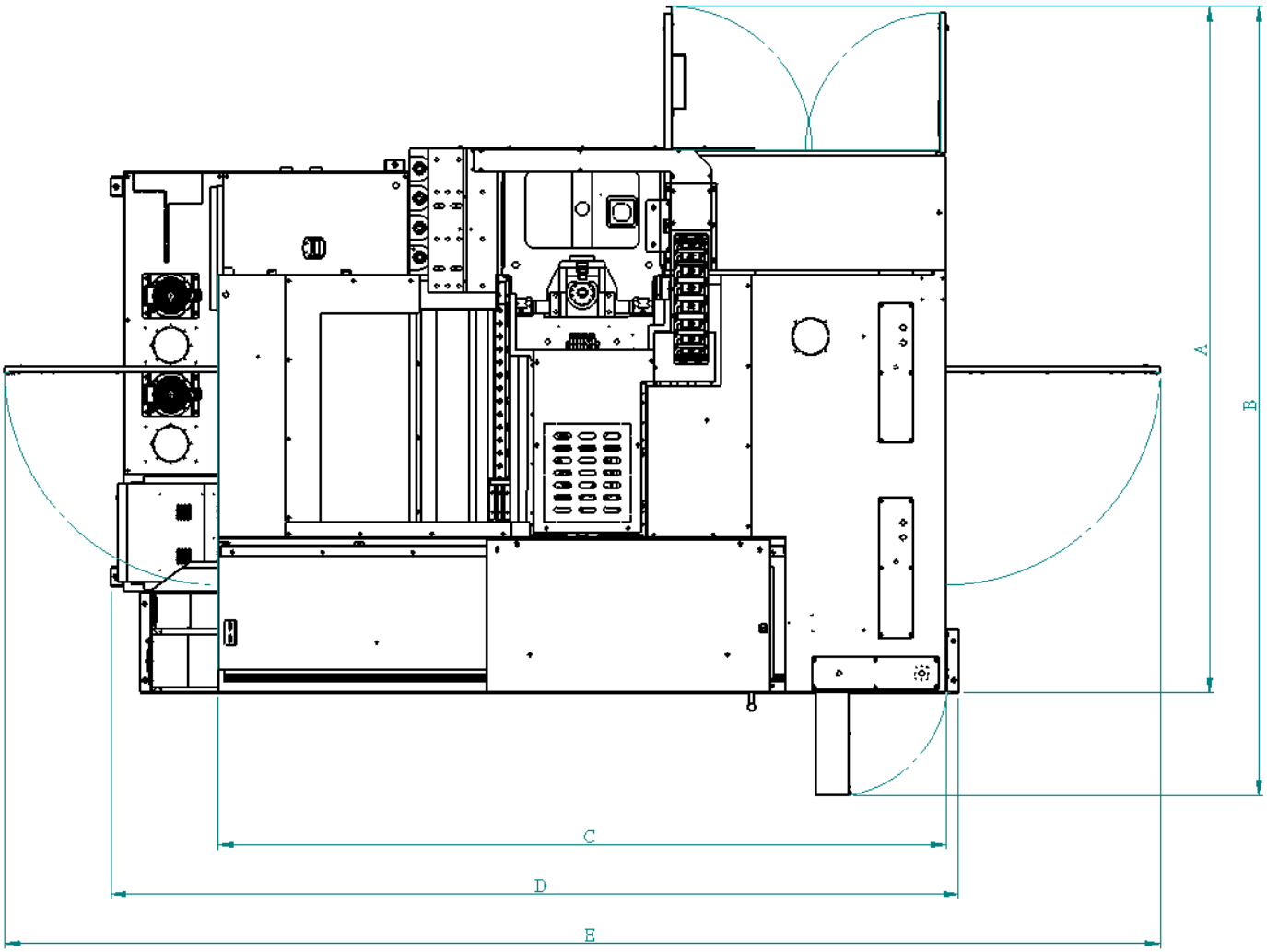

Figure 1.2 TOP VIEW OF MACHINE

Machine model	A	B	C
SVL-4023	1740mm	3000mm	3940mm

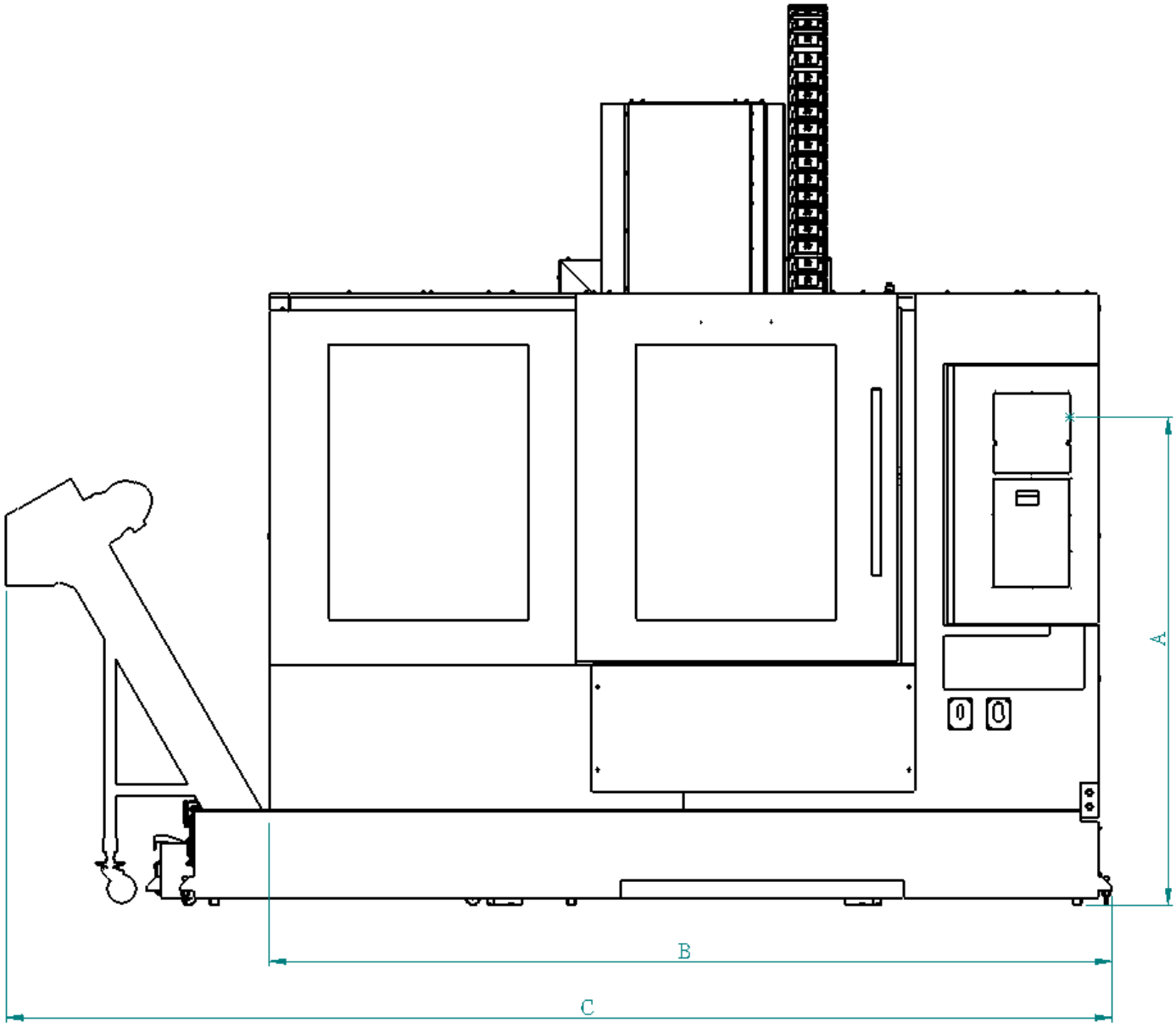

Figure 1.3 FRONT VIEW OF MACHINE

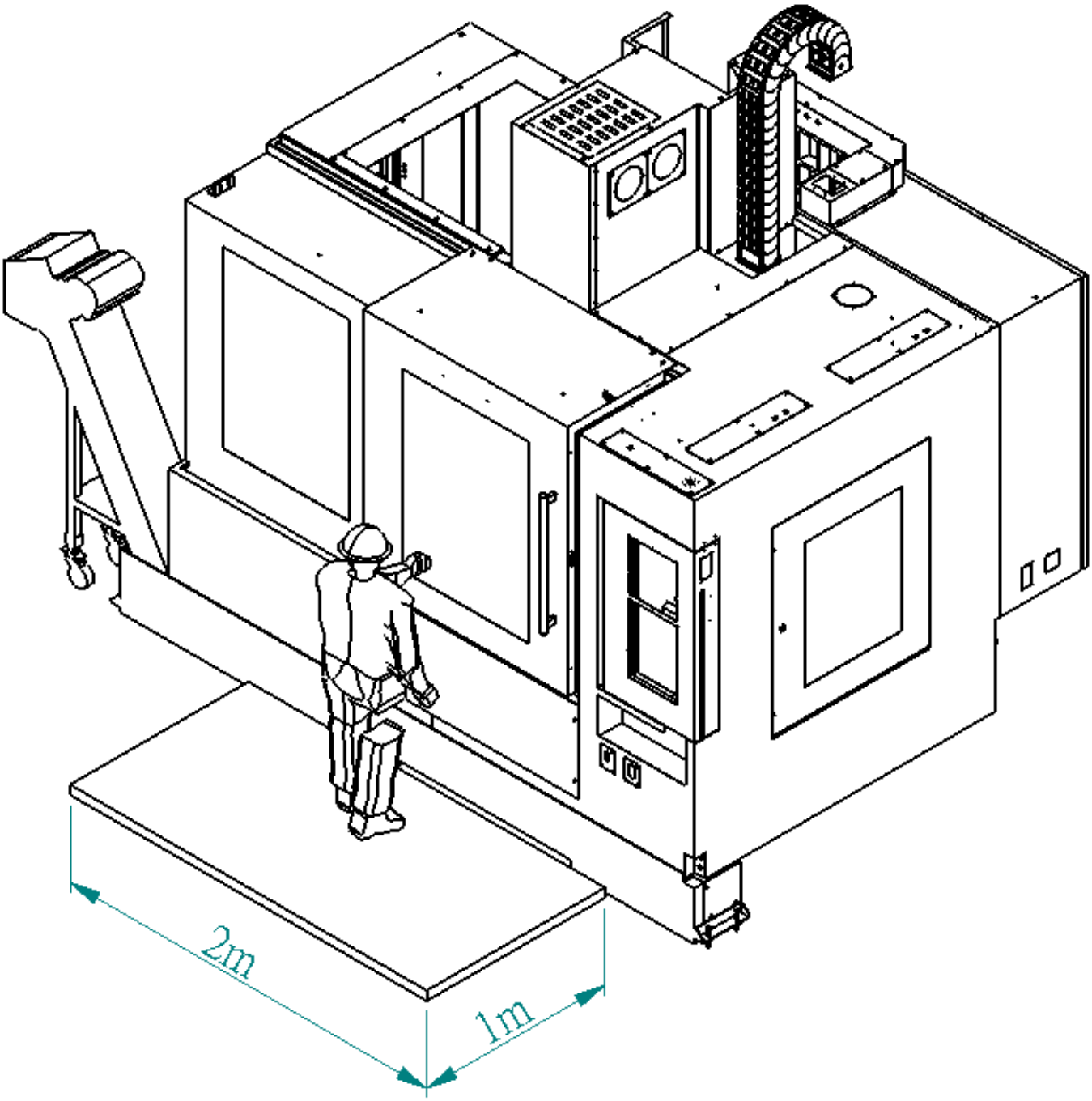

2. Preparation Of Transport Route

Prepare the machine transport route referring to the machine size at shipment (☞ Table 2.1)

Item	Type	Height	Width	Depth
Machine Body	SVL-4023	4640	3000	2330

stop

When lifting the machine body using a crane the total height requirement necessary to Provide adequate lifting space is 500mm plus the height of the lifting equipment . (☞ Figure 2.1)

Figure 2.1
MACHINE BODY AT SHIPMENT

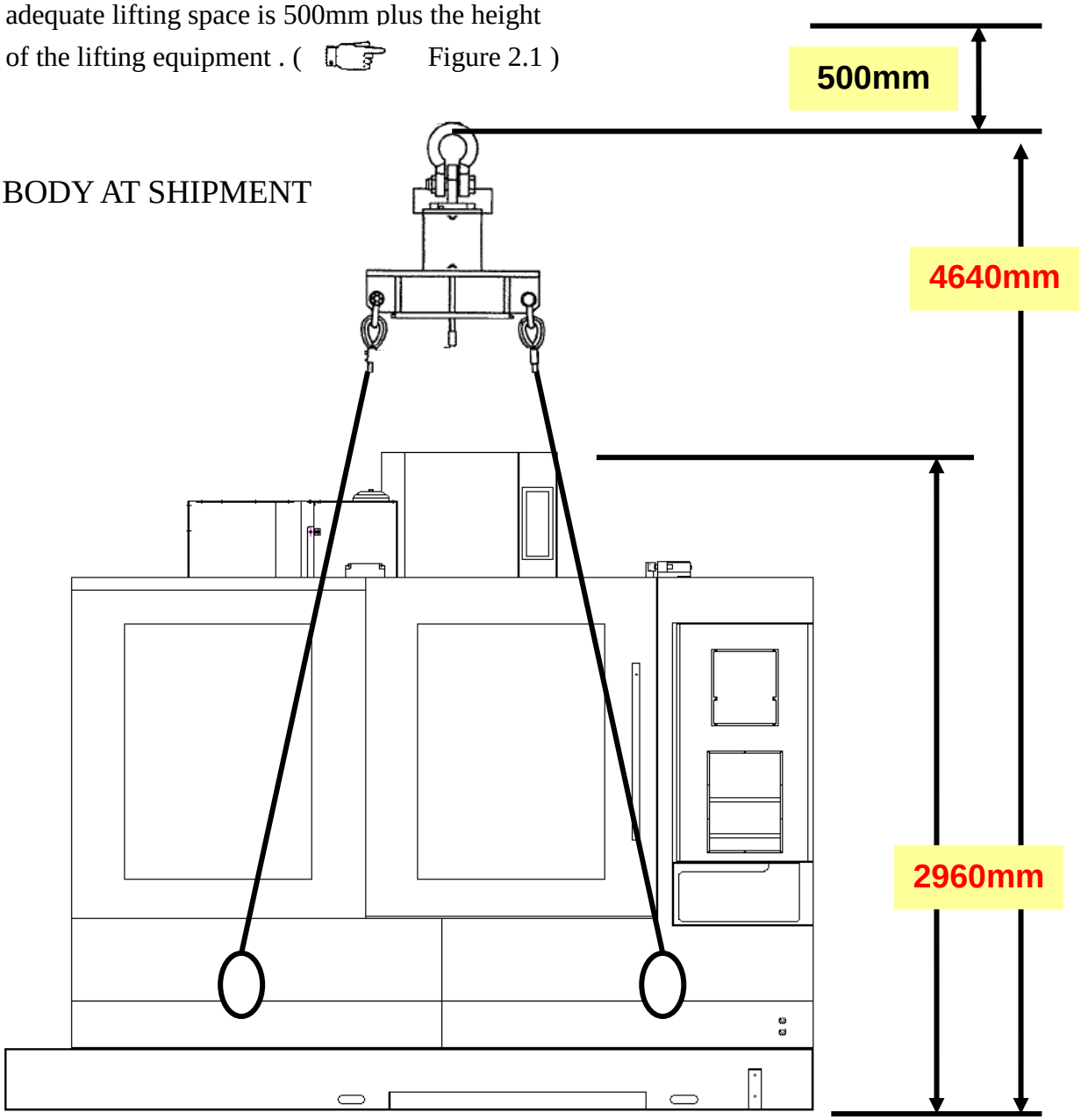

3. Preparation Of Transportation Equipment

Prior to transportation of the machine, prepare equipment capable of supporting the size and standing weight of the machine such as a crane, fork lift truck .

Table 3.1 MACHINE WEIGHT AT SHIPMENT

Item	Type	Weight (including lifting equipment)
Machine body	SVL-4023	Approx. 8000Kg

Handling Unpackaged Machine

Handle the Unpackaged Machine by a Forklift

1. The unpackaged machine approximately weighs 7.5 tons. The forklift used for handling the machine should have a safe load capacity greater than 9 tons so as to avoid accidents.
2. Check if there is any person or obstacle in the way while moving the machine. Please evacuate people and remove obstacles before moving so as to avoid collision and ensure the safety of personnel and machinery.
3. Adjust forks of a forklift to a proper position before moving. Pay attention to the barycenter of the machine. Place it at the loading center of a forklift so as to avoid losing balance and causing accidents.
4. When the machine is lifted by the forks, pay attention to the height the forks go. If the barycenter is at a higher position, it may swing and lose balance and then cause accidents.
5. If the sight is hindered while moving the machine, please back the vehicle. Meanwhile, ask someone to help give directions to ensure safety. Drive the forklift as slowly as possible

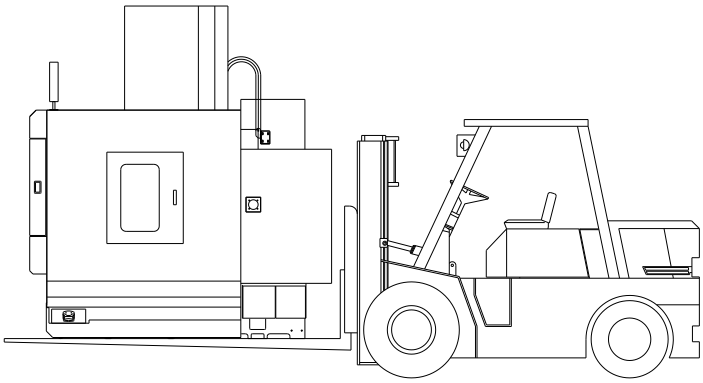

Figure 3.1 Handle the Unpackaged Machine by a Forklift

4. SET-UP CONDITIONS

Table 4.1 SET-UP CONDITIONS

Set-Up Location And Environmental Conditions
Ambient Temperature：10 to 40 degrees (optimum 26±1 degree)
Relative Humidity：35 to 70% (no condensation)
Temperature Fluctuation：less than 1 degree / 1 hr
Well-illuminated
Free from direct sunlight
Dust-free
Available space for storing raw materials, finished workpieces and tools.
Available space for maintenance work .
Adequate space around machine to open doors completely
Required electrical power sources
A level foundation strong enough to support the weight of the machine
Appropriate distance from factory air ducting / inlets (air flow)

5. AIR / POWER SOURCE

Table 5.1 AIR / POWER SOURCE (1)

Item	Specifications	
Electrical Source	AC200/220V ± 10% & 50/60HZ ± 2%	
Maximum Power Consumption	SVL-4023	17.6 KVA (Standard) 20 KVA (Including Options)
Total Power Requirements	Actual：	
	SVL-4023	20 * 0.7 = 12.3KVA (Standard)
		20 * 0.7 = 14KVA (Including Options)
Air Source	0.5 to 0.8 MPa 660L / min (ANR) without scale with air blow Dew point temperature： -20 degrees or less •Clean air is to be provided：Equivalent to ISO 1.5.1 standard as specified by ISO 8573-1 •Max. particle diameter：0.0001mm or less •Dew point at max pressure：Below 7 degrees •Max oil concentration ：0.01 mg/m³ or less	
Air Dryer	Should be ordered or unless provided by customer	
Air Filtration Unit	5μm + 0.3μm + Moisture Remover	

Table 5.2 AIR / POWER SOURCE (2)

Power Source	Breaker Rated Current (A)	Cable Size (Ex)
Up to AC240V	60A	10mm^{2}IV

IV：600V PVC insulated wire

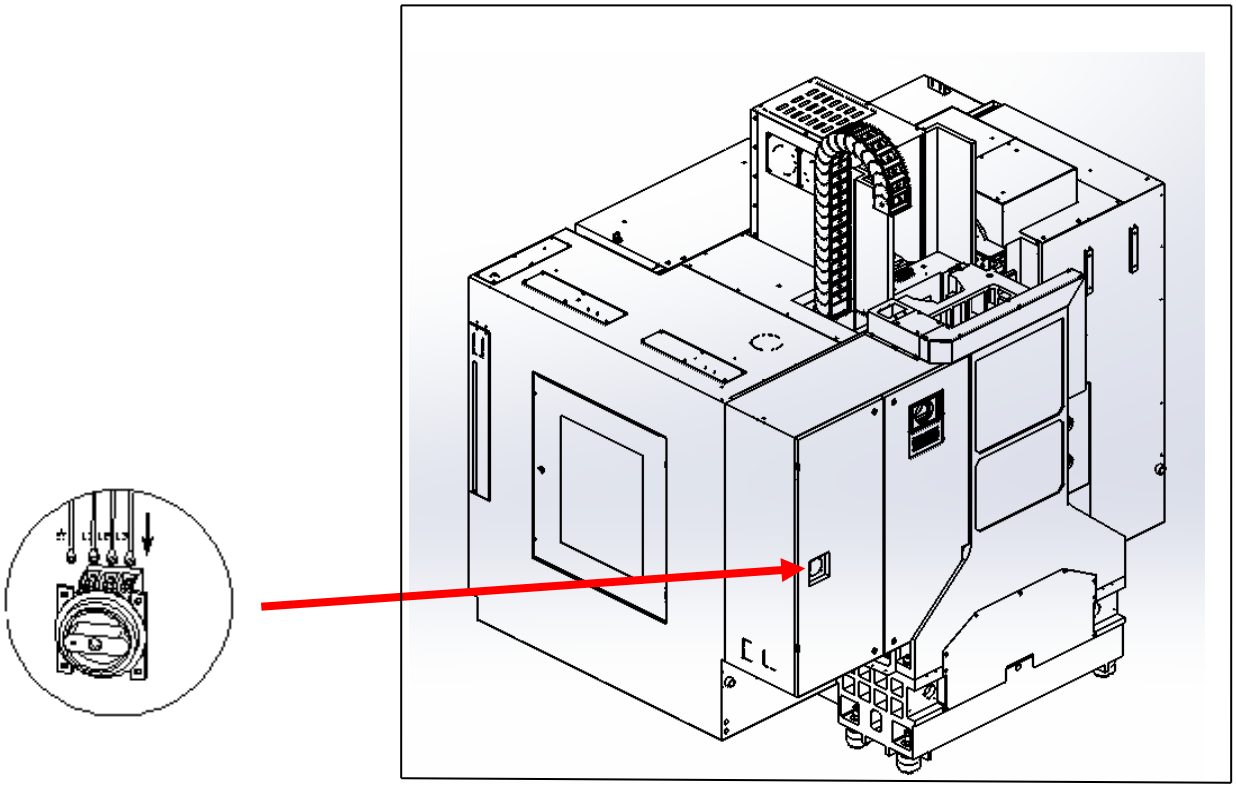

Figure 5.1 Electrical Power Source Connection

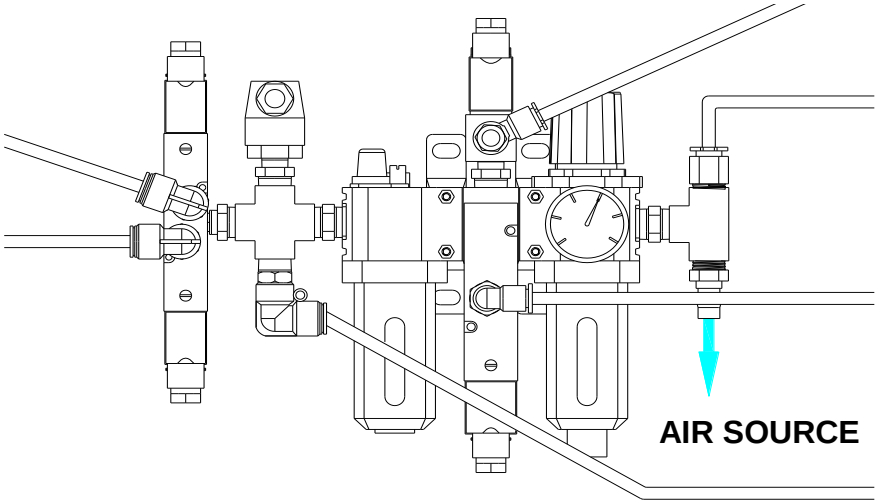

Figure 5.2 Air Source Connection

6. RECOMMENDED FOUNDATIONS

Table 6.1 Recommended foundation

Item	Specification
Ground Resistance	5000Kg/ m² or more
Foundation Construction	Shown in Figure 6.1 ~ 6.1.1

SVL-4023 ：

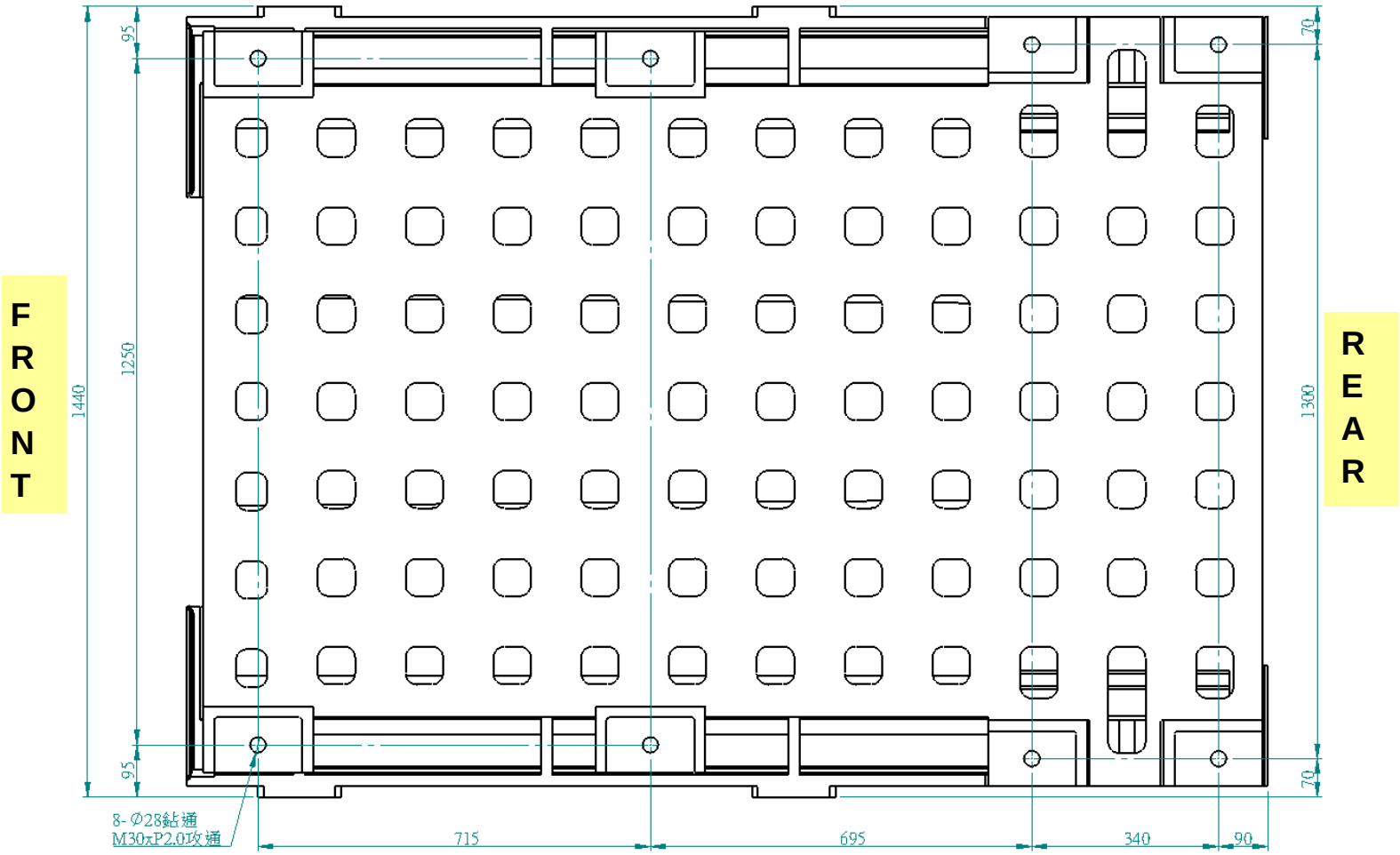

Figure 6.1 Foundation Drawing

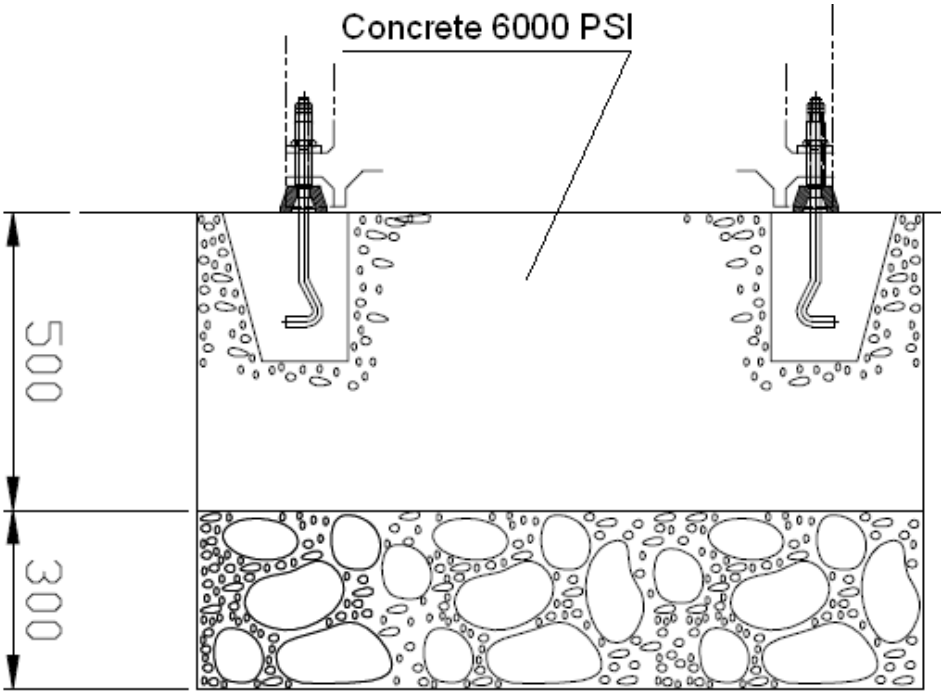

Figure 6.2 Foundation Drawing

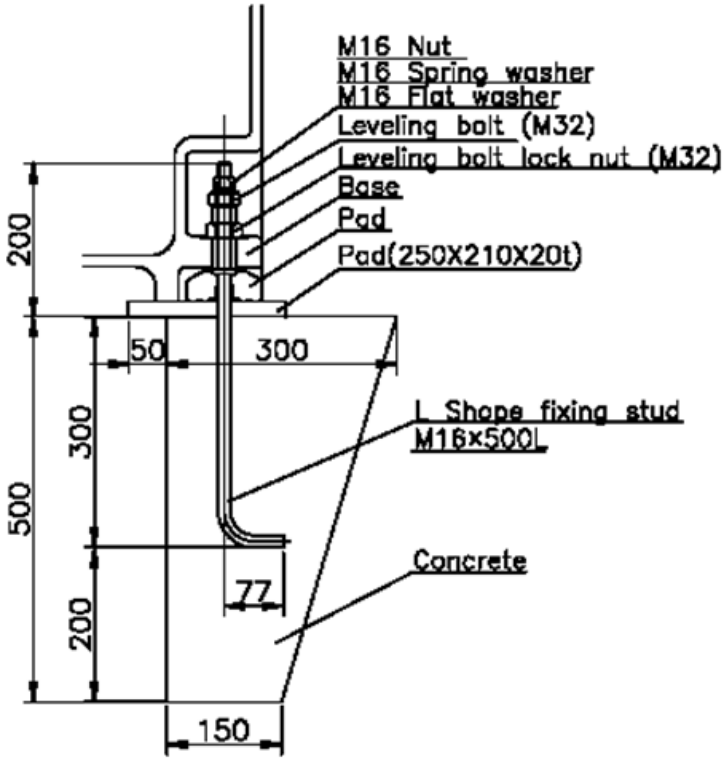

NOTES：

1. Foundation preparation are generally not required if the floor thickness is 500mm or more of reinforced concrete. However, when additional machinery is in use surrounding the machine, foundation preparations are required.
2. The following data is to be used as a reference. Concrete required is FC180 standard and above.
   → For rubble, use medium or large size crushed stones.
   → Section C ensures isolation from surrounding vibration. Use small crushed stone.
   → leveling concrete thickness：200mm

stop The foundation drawings on previous pages show only recommended values. Foundation requirements vary according to ground conditions. Prior to performing foundation preparations, consult a civil engineer or building contractor.

Chapter 3 OPERATION

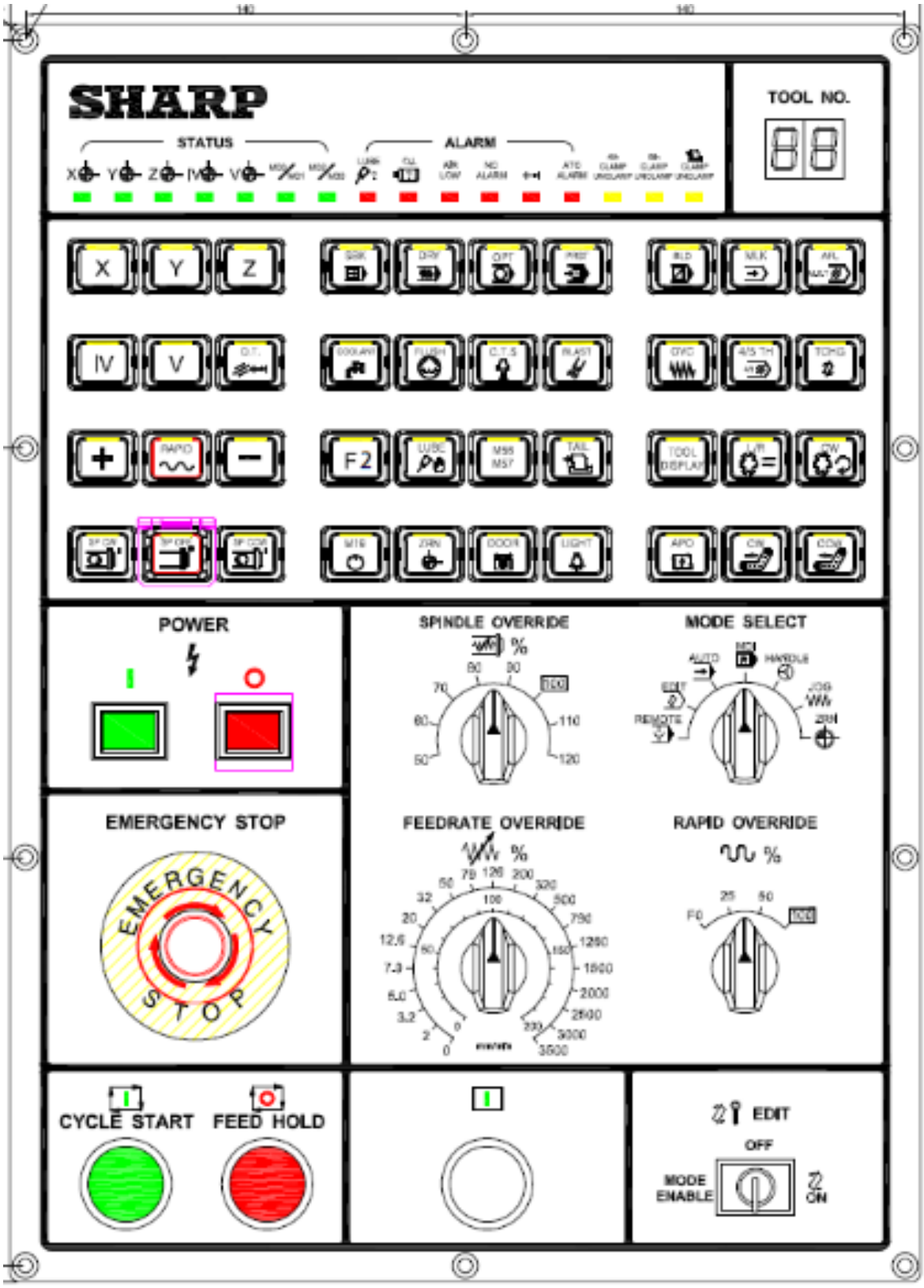

BEFORE STARING OPERATION

Preparation staring For machine operation

Chart 1 SAFETY
1. MAIN OPERATION PANEL
2. M - CODE
3. SETTING/CHANGING MACHINE PARAMETERS
4. OPENING/CLOSEING DOORS

OPERATION FLOWCHART

POWER ON

5. TURNING ON/OFF POWER SUPPLY

PRE-OPERATION CHECKS

CHART 5 PERIODIC MAINTENANCE LIST (1/3)
PRE-OPERATION MAINTENANCE

MACHINING PREPARATION

DATA REGISTRATION/ EDITING

6. DATA REGISTRATION/ EDITING
1. MAIN OPERSTION PANEL
2. M-CODE

NC PROGRAM

TOOL NUMBER

TOOL OFFSET VALUE

WORKPIECE OFFSET VALUE

WORKPIECE PREPARATION

7. WORKING SETTING
→ 1. OPENING/CLOSING DOORS

TOOL PREPARATION

8. TOOL PREPARATIONS
→ 2. TOOL CHANGE

MACHINING

MACHINING

9. TOOL CHANGE
10. CUTTING FLUID SUPPLY
11. CHIP DISPOSAL
12. AUTOMATIC OPERATION

1. MAIN OPERATION PANEL

The main operation panel is used to perform the following operations;

- Manual / Automatic operation
- Turning functions on/ off and changing operating modes
- Registering and editing NC programs
- Inputting tool offset values and work coordinate system settings
- Changing parameters
- Display alarm screens and maintenance operations

1.1 MAIN OPERATION PANEL FUNCTIONS

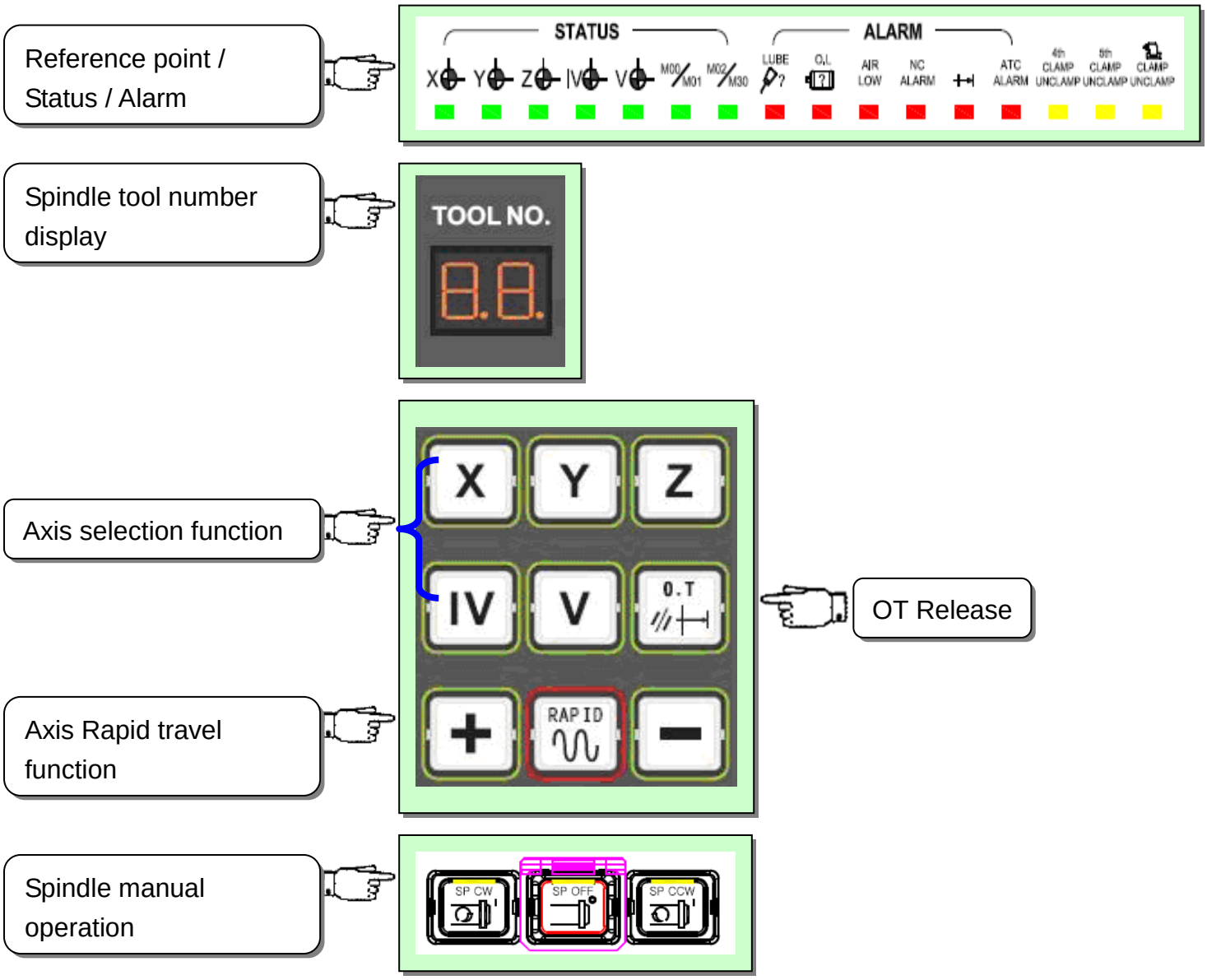

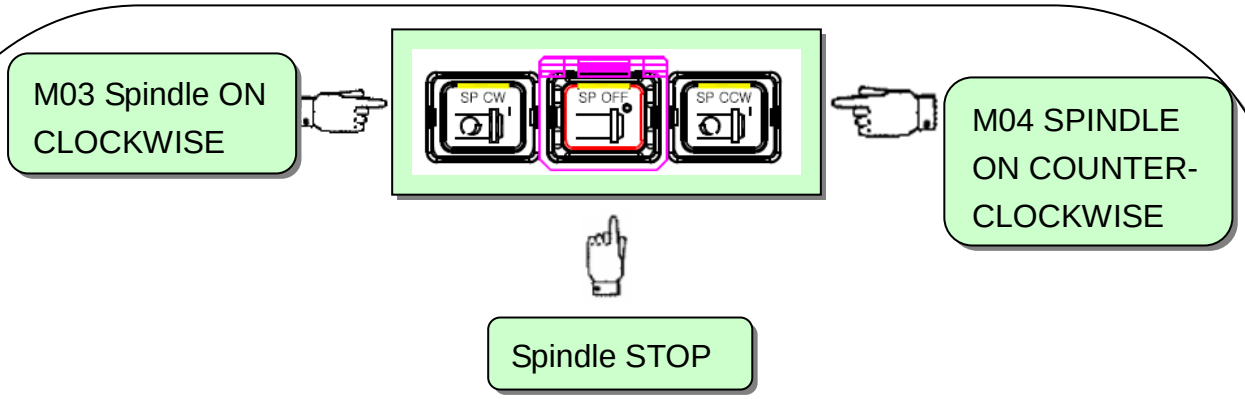

TO START OR STOP THE SPINDLE IN RAPID, JOG OR HANDLE MANUAL OPERATION MODE, THESE SWITCHES ARE USED.

A. SET THE MODE SELECT SWITCH TO MDI POSITION AND SET SPINDLE SPEED IN MDI OPERATION AS FOLLOW..

IN FANUC 0i CONTRAL

KEYIN **SXXXX** THEN "INPUT"

PUSH (2) CYCLE START TO EXCUTE

IN FANUC 18iMC CONTROL

KEYIN **SXXXX;**

PUSH (2) CYCLE START TO EXCUTE

B. SELECT THE DESIRED MODE AMONG RAPID, JOG AND HANDLE MODES BY THE MODE SELECT SWITCH

C. PRESS THE PUSH BUTTON SPINDLE CW OR CCW ,THE SPINDLE WILL START RUNNING AT THE SET SPEED AT STEP A.

D. THE SPINDLE STOPS WHEN THE PUSH BUTTON SPINDLE OFF IS PRESSED.

E. TO START AGAIN, PRESS THE PUSH BUTTON SPINDLE ON THE SPINDLE STARTS RUNNING AT THE SET SPEED AT STEP A. AGAIN.

TO CHANGE SPINDLE SPEED REPEAT STEPS A. – E. AFTER SETTING PUSH THE CYCLE START BUTTOM THE SPINDLE

WILL RUN AT THE NEWLY SET SPEED. NOTE : DOOR MUST CLOSED TO MATCH COMMAND'S SPEED.

F. WHEN DOOR OPEN NEED TO RUN SPINDLE KEEP PRESS PERMISSIVE BUTTON PRESS SP CW OR SP CCW FOR JOG RELEASE TO STOP SPINDLE.

RAPID

IN JOG MODE, PUSH THIS BUTTOM TOGETHER WITH X+ X- Y+ Y- Z+ Z- IV+ IV- TO MOVE THE AXIS RAPIDLY.

SET THE RAPID SPEED BY RAPID OVERRIDE SELECT SWITCH

PROGRAMMING FUNCTION BUTTON

CUTTING FUNCTION BUTTON

OPTION FUNCTION BUTTON

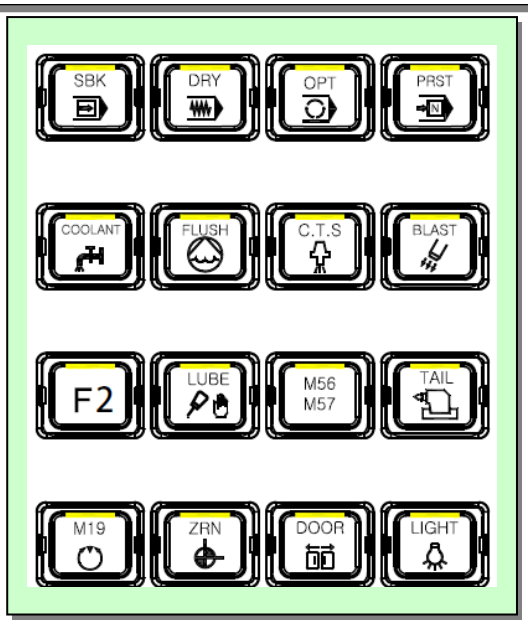

SINGLE BLOCK

THE SWITCH IS APPLIED TO EXECUTE TAPE PROGRAM OR MEMORY PROGRAM STEP BY STEP. WHEN THE PUSH BUTTON IS SET TO ON AND THE PUSH BUTTON CYCLE START (2) IS PRESSED. THE MACHINE EXECUTES ONE BLOCK OF THE PROGRAM AND STOPS. WHEN THE PUSH BUTTON SINGLE BLOCK IS PRESSED DURING MEM MODE OPERATION, THE MACHINE STOPS AFTER EXECUTED OF THE CURRENT BLOCK.

DRY RUN

WHEN THE SWITCH IS SET AT ON, FEED COMMAND (F CODE) IN THE PROGRAM IS IGNORED DURING. MEM, MDI OPERATION MODE AND THE FEED SPEED SELECTED BY THE SELECT SWITCH JOG FEEDRATE (39) BECOMES EFFECTIVE. THE RAPID TRAVERSE SPEED CAN BE ALSO CHANGED BY THE SWITCH DRY RUN.

OPTIONAL STOP

BY SETTING THIS SWITCH, THE OPTIONAL STOP FUNCTION OF M 01 IS IGNORED OR NOT IGNORED DURING MEM OPERATION MODE.

WHEN THE SWITCH IS SET AT ON, THE BLOCK WITH M 01 IS EXECUTED AND THE OPERATION STOPS AFTER THE EXECUTION OF THE BLOCK.

PROGRAM RESTART：The case of cutting tool breakage, or after the holidays , this function enables restart the program .
1) Press this button on, display the program to be restarted inputting either the sequence number or the block number.

COOLANT ON / OFF

PUSH TO START COOLANT, PUSH AGAIN TO STOP.

PRIORITY IS GIVEN TO THE SETTING OF THE SWITCHES OVER M FUNCTION SUCH AS M08 (COOLANT ON) AND M09 (COOLANT OFF).

CHIP FLASH ON/OFF

PUSH TO START CHIP FLASH, PUSH AGAIN TO STOP.

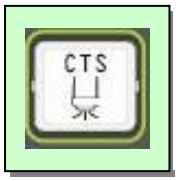

COOLANT THROUGH SPINDLE ON/OFF

PUSH TO START COOLANT THROUGH SPINDLE, PUSH AGAIN TO STOP.

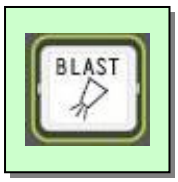

Air blast button:

Press this button to start air blast, press it again to stop it

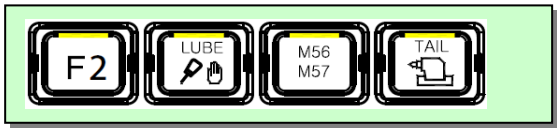

SPARE FUNCTIONFOR OPTION

M19 SPINDLE ORIENTATION

PUSH THIS BUTTOM TO ORIENTATE SPINDLE (M19)

AUTO ZERO RETURN

THE SWITCH IS USED TO RETURN THE SPINDLE HEAD(Z), SADDLE(Y) AND TABLE (X)TO THE REFERENCE POINT (COORDINATE ZERO).

THE OPERATION IS AS FOLLOWS:

SET THE MODE SWITCH TO ZRTN, PUSH THIS BUTTOM.

THE TRAVEL SPEED WILL REFER TO

RAPID TRAVERSE SWITCH

NOTICE: IF START POSITION FOR REFERENCE POINT RETURN IS LOCATED WITHIN 50mm (2 inch) FROM THE REFERENCE POINT (DECELERATION RANGE) THE AXIS WILL GOES REVERSE DIRECTION UNTIL PROPER DISTANCE.

WORK LAMP ON/OFF

PUSH TO LIGHT THE WORK LAMP, PUSH AGAIN TO TURN OFF.

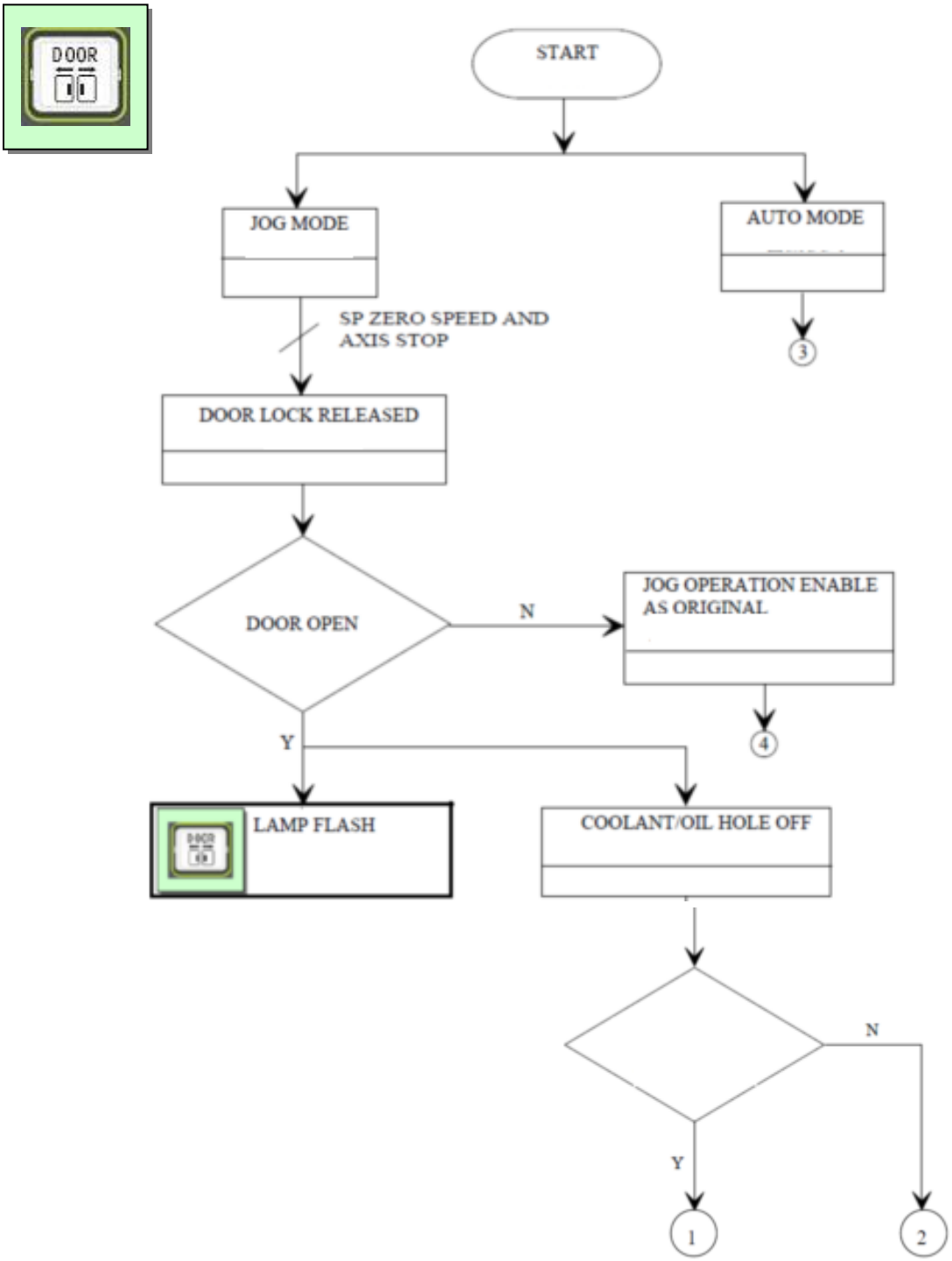
DOOR
START
JOG MODE
AUTO MODE
SP ZERO SPEED AND
AXIS STOP
3
DOOR LOCK RELEASED
DOOR OPEN
N
JOG OPERATION ENABLE
AS ORIGINAL
4
Y
LAMP FLASH
COOLANT/OIL HOLE OFF
N
Y
1
2

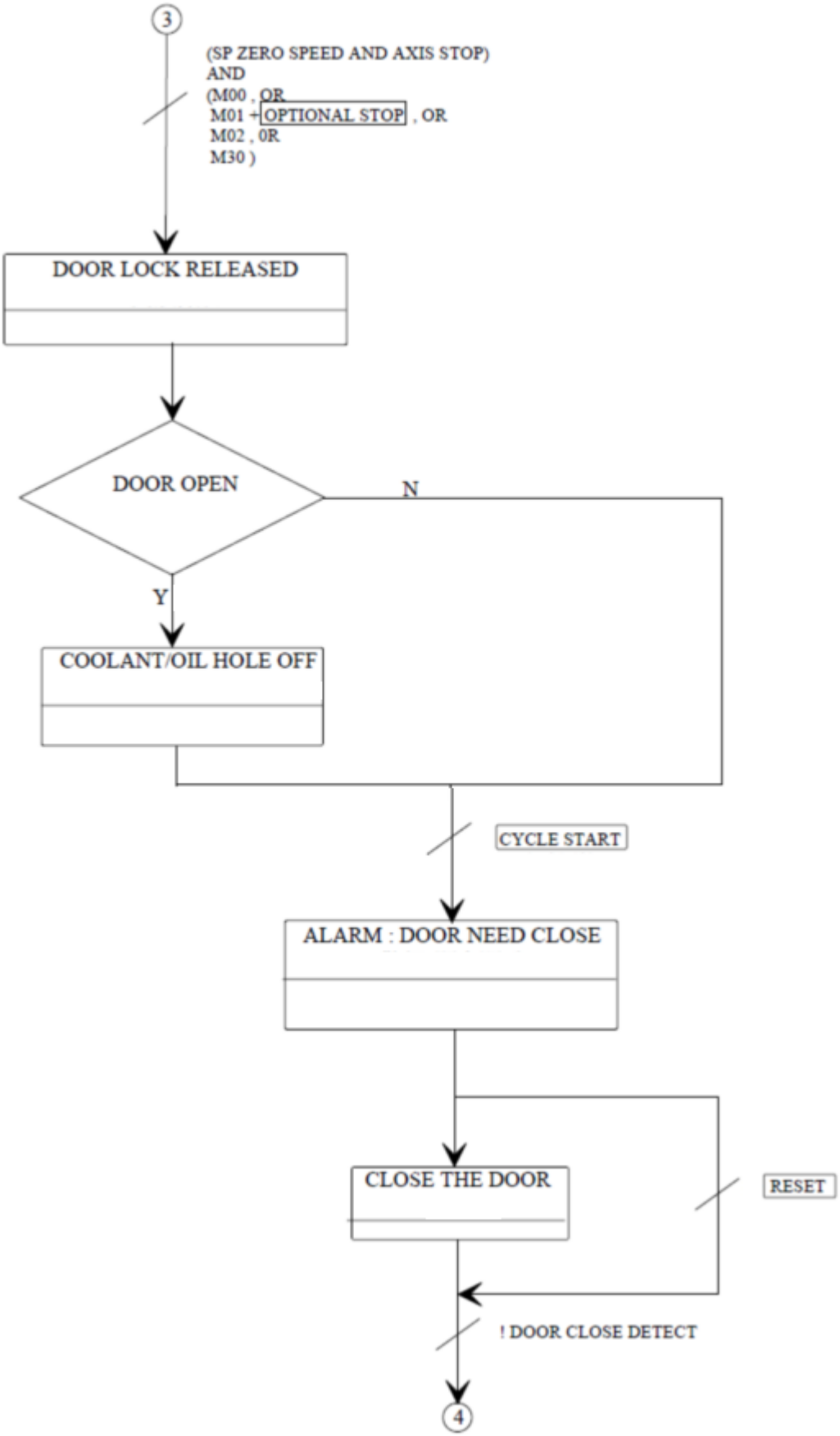
3
(SP ZERO SPEED AND AXIS STOP)
AND
(M00 , OR
M01 + OPTIONAL STOP , OR
M02 , OR
M30)
DOOR LOCK RELEASED
DOOR OPEN
N
Y
COOLANT/OIL HOLE OFF
CYCLE START
ALARM : DOOR NEED CLOSE
CLOSE THE DOOR
RESET
! DOOR CLOSE DETECT
4

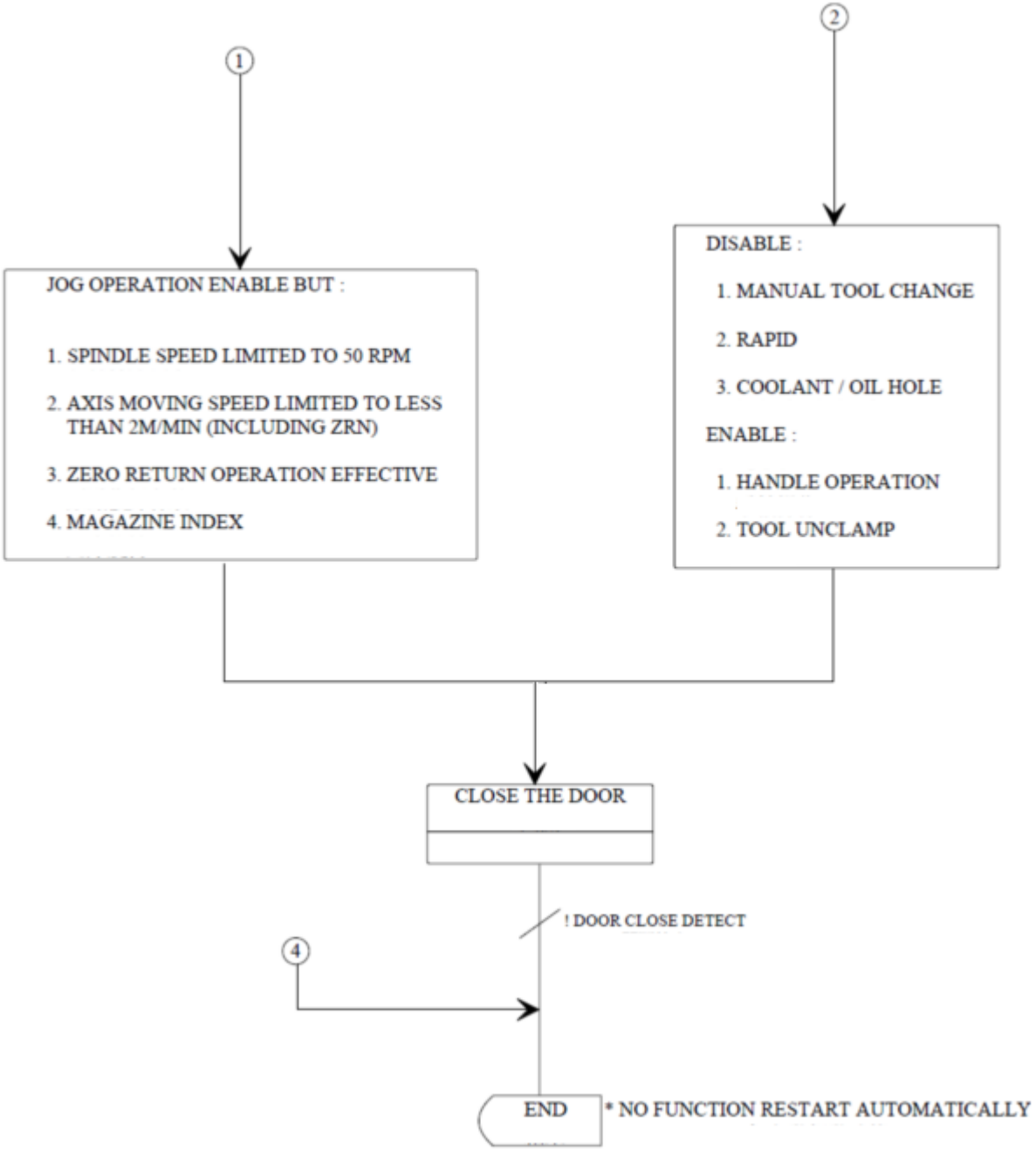
1
2
JOG OPERATION ENABLE BUT :
1. SPINDLE SPEED LIMITED TO 50 RPM
2. AXIS MOVING SPEED LIMITED TO LESS THAN 2M/MIN (INCLUDING ZRN)
3. ZERO RETURN OPERATION EFFECTIVE
4. MAGAZINE INDEX
DISABLE :
1. MANUAL TOOL CHANGE
2. RAPID
3. COOLANT / OIL HOLE
ENABLE :
1. HANDLE OPERATION
2. TOOL UNCLAMP
CLOSE THE DOOR
! DOOR CLOSE DETECT
4
END
* NO FUNCTION RESTART AUTOMATICALLY

PROGRAMMING FUNCTION BUTTON DESCRIPTION

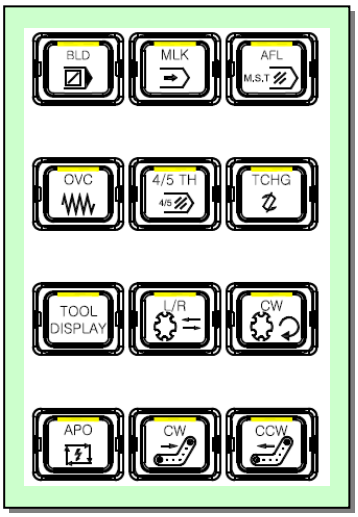

OPTIONAL BLOCK SKIP

BY SETTING THIS SWITCH, THE BLOCK HAVING "/" (SLASH) AT ITS HEAD IS IGNORED OR NOT IGNORED. WHEN THE SWITCH IS AT ON, THE BLOCK HAVING "/" AT ITS HEAD IS IGNORED.

THE SWITCH IS NOT EFFECTIVE FOR THE BLOCK IN EXECUTION AND THE BLOCK READ IN THE BUFFER, AND BECOMES EFFECTIVE FROM THE NEWLY READ BLOCK.

MACHINE LOCK

TO LOCK THE AXIS MOVEMENT DURING EXCUTE PROGRAM.

IN AUTO OR MDI OPERATION MODE, THE PROGRAM CAN BE SIMULATED, THAT IS, THE MACHINE DOES NOT ACTUALLY WORK, BUT THE DISPLAY APPEARS AS IF THE MACHINE ACTUALLY DOES.

NOTICE: M,S,T CODE STILL EXCUTE. (SPINDLE ROTATION, TOOL CHANGE STILL EXCUTE) TO CANCEL PUSH **M,S,T, CODE LOCK.**

M.S.T. CODE LOCK

TO CANCEL THE EXECUTION OF M, S, T, CODE IN THE PROGRAM.

NOTICE: AXIS MOVEMENT (G CODE) STILL EXCUTE, TO CANCEL, PUSH **MACHINE LOCK.**

OVERRIDE CANCEL

PUSH TO RESET THE FEEDRATE TO 100%, AND IGNORE THE SETTING FROM OVERRIDE SELECT SWITCH.

NOTICE: PUSH THIS BUTTON MAY CAUSE THE SUDDEN CHANGE OF THE CUTTING FEED.

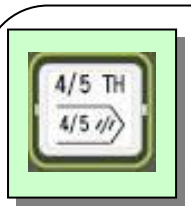

4TH & 5TH-axis On/off extraction:

a. When you need to use 4TH & 5TH-axis. (Servo ready)
Ignore 4TH & 5TH-axis button is off. (Light is off)
b. When you want to off the 4TH & 5TH-axis. (Servo not ready)
Ignore 4TH & 5TH-axis button is on. (Light is on)
c. When you push this button, you need to restart the main power.

TOOL CHANGE

PUSH THIS BUTTON TO EXCUTE TOOL CHANGE（OPTION）

Z AXIS MUST IN TOOL CHANGE POSITION.

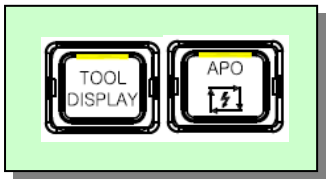

Tool display : Tool magazine NO.
APO :AUTO POWER OFF

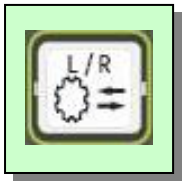

L/R button for tool magazine:
This function is not available in this machine.

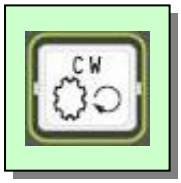

TOOL MAGAZINE TURN CLOCKWISE

PUSH THIS BUTTOM TO ROTATE TOOL MAGAZINE CLOCKWISE, RELEASE TO STOP

(IN MANUAL MODE)

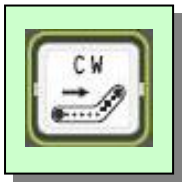

CHIP CONVEYOR ON / OFF（JOG）

PUSH THIS BUTTOM TO START THE CHIP CONVEYOR

PUSH AGAIN TO STOP

CHIP CONVEYOR REVERSE ON / OFF

PUSH THIS PUTTOM TO REVERSE THE CHIP CONVEYOR

RELEASE TO STOP IT

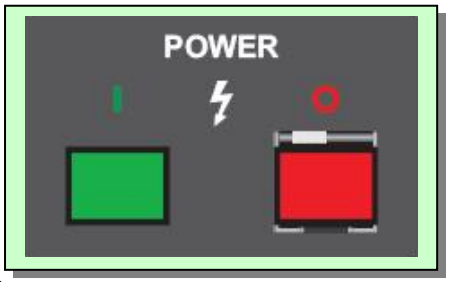

TURNING ON/OFF POWER SUPPLY

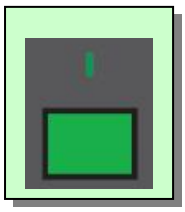

POWER ON：

1) Turning on the main power switch
2) Press the [CONTROL POWER ON] button

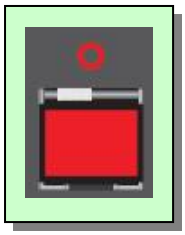

POWER OFF：

1) Press the [CONTROL POWER OFF] button
2) Turning off the main power switch
3) Emergency stop should be pressed before pressing this button).

ROTATION SELECT SWITCH DESCRIPTION

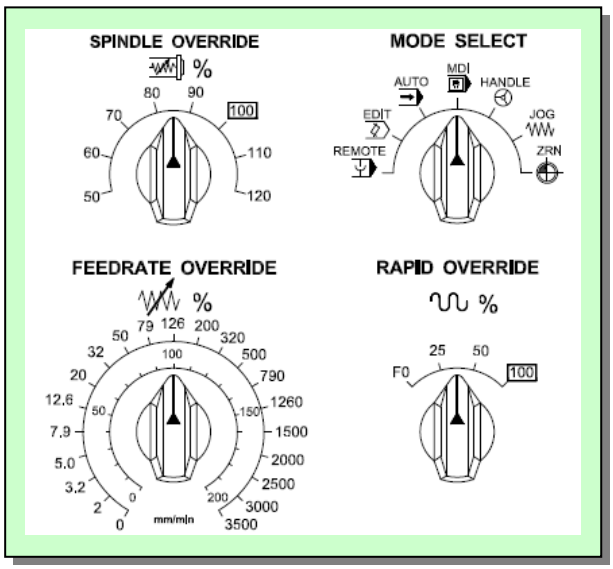

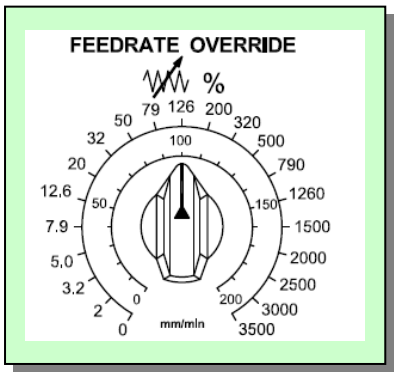

OVERRIDE SELECT SWITCH (%)

JOG FEEDRATE SELECT SWITCH (mm / min)

A.THE SELECT SWITCH PERMITS OVERRIDING THE FEED SPEED SPECIFIED BY F CODE IN AUTO OR MDI MODE OPERATION WITHIN A RANGE FROM

0 TO 200% WITH INCREMENT OF 10%.

HOWEVER, THE OVERRIDE SELECTION REMAINS INEFFECTIVE WHEN SWITCH LOCATED OVER THE OVERRIDE SELECT SWITCH IS SET AT CANCEL POSITION. THE OVERRIDE SELECT SWITCH DOES NOT EFFECT THE TAPPING FEED SPEED IN TAPPING CYCLE (G84).

B. THE FEED SPEED CAN BE PRESET BY THIS SELECT SWITCH IN AUTO OR MDI

MODE WHEN THE SWITCH DRY RUN IS SET AT ON.

THE SPEED IS SELECTABLE WITHIN A RANGE FROM

0 TO 3,500 mm / min

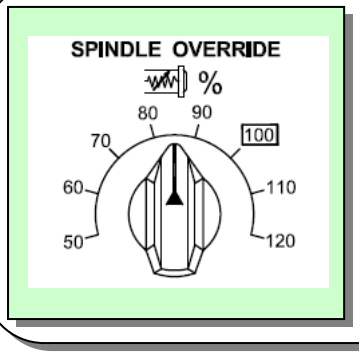

SPINDLE SPEED OVERRIDE SELECT SWITCH

THIS SWITCH CAN OVERRIDDEN THE SPINDLE SPEED FROM 50 % TO 120 % , 10 % PER STEP.

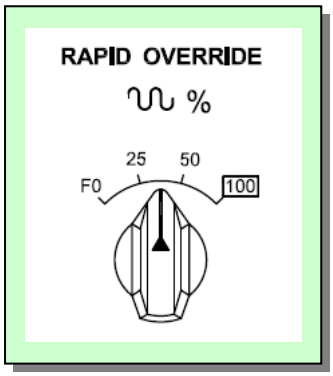

RAPID OVERRIDE SELECT SWITCH

RAPID SPEED CAN BE OVERRIDDEN BY 100%, 50% 25% F0.

WHEN THE RAPID TRAVERSE SPEED IS AT 20 m / min, AND OVERRIDDEN BY 50%, FOR EXAMPLE, THE SPEED IS REDUCED TO 10 M / min.

F0 IS SET TO 100 mm / min. THE OVERRIDE FUNCTION IS APPLICABLE TO THE FOLLOWING RAPID TRAVERSE.

A.RAPID TRAVERSE IN GOO.

B.RAPID TRAVERSE DURING EXECUTION OF CANNED CYCLE.

C.RAPID TRAVERSE IN G27,28,29.

D.MANUAL RAPID TRAVERSE IN RAPID MODE OPERATION.

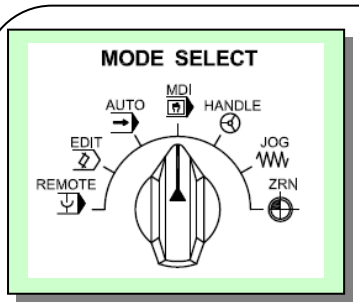

MODE SELECT SWITCH

USE THIS SWITCH TO CHANGE OPERATION MODE.

(CE) BEFORE CHANGE MODE, TURN THE KEY SWITCH 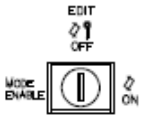

TO "MODE ENABLE", TO RELEASE THE CHANGE MODE PROTECTION.

AFTER MODE CHANGE, TURN THE KEY BACK TO OFF POSITION.

DESCRIPTION OF MODE SELECT SWITCH

REMOTE	**DNC (REMOTE) MODE** USE THIS MODE TO RUN THE PROGRAM (MACHINING) FROM YOUR CONNECTED PERSONAL COMPUTER, AND THE OPERATION METHOD DEPENDS ON THE DNC SOFTWARE IN YOUR COMPUTER .
EDIT	**EDIT MODE** THIS MODE IS SELECTED TO STORE PROGRAM IN THE MEMORY AND TO EDIT THE PROGRAM STORED IN THE MEMORY.
AUTO	**AUTO (MEMORY) MODE** THIS MODE IS SELECTED TO EXECUTE THE PROGRAM STORED IN THE MEMORY, OR TO SEARCH THE SEQUENCE NO. OF PROGRAM STORED IN THE MEMORY.

MDI	**MDI MODE** THIS MODE IS SELECTED WHEN DATA IS MANUALLY ENTERED (KEY IN).
HANDLE	**HANDLE MODE** THIS MODE IS SELECTED WHEN USING PULSE GENERATOR HANDWEEL TO MOVE AXIS MANUALLY
JOG	**JOG MODE** THIS MODE IS SELECTING TO MANUALLY MOVE COORDINATE IN THE AXIS, SELECTED BY THE AXIS SELECT BUTTOM X+ X – Y+ Y- Z+ Z- A+ A- FOR JOG OPERATION.
ZRTN	**ZERO RETURN MODE** SELECT THIS MODE THEN PUSHING +X X TO MOVE X TO ZERO POINT +Y Y TO MOVE Y TO ZERO POINT +Z Z TO MOVE Z TO ZERO POINT +IV IV TO MOVE IV TO ZERO POINT YOU CAN PUSH 2 OR 3 AXIS TOGETHER OR IN THIS MODE PUSH AUTO ZERO RETURN BUTTON ZRN TO MOVE THREE AXIS TOGRTHER TO ZERO POINT. THE TRAVEL SPEED WILL REFER TO RAPID TRAVERSE SWITCH

EMERGENCY STOP

THE PUSH BUTTON IS USED IMMEDIATELY STOP THE MACHINE OPERATION IN CASE OF EMERGENCY. AT THE SAME TIME AS THE PUSH BUTTON IS PRESSED, THE SERVO SYSTEM OF THE MACHINE IS SHUT OFF THE POWER SOURCE AND THE NC EQUIPMENT IS RESET.

TO START THE MACHINE AGAIN AFTER THE EMERGENCY STOP, PROCEED AS FOLLOWS:

A. ELIMINATE THE CAUSE OF EMERGENCY STOP AND SET UP THE MACHINE TO BE READY FOR OPERATION.

B. WHEN THE EMERGENCY STOP PUSH BUTTON IS PRESSED, THE PUSH BUTTON IS LOCKED.

TO RELEASE THE PUSH BUTTON FROM LOCKING, ROTATE OR PULL IT .

C. PRESS RESET BUTTON ON THE NC OPERATION PANEL.

D. AFTER RESETTING FROM THE EMERGENCY STOP, BE SURE TO PERFORM ZERO RETURN OF ALL AXIS IN MANUAL OPERATION.

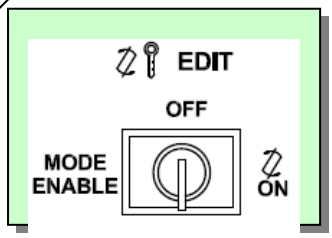

PROGRAM PROTECT AND MODE ENABLE

THERE ARE TWO FUNCTIONS ON THIS PROTECT KEY SWITCH

A、 PROGRAM EDIT PROTECT

FOR PROTECT THE PROGRAM STORED IN THE MEMORY FROM ERRONEOUS OPERATION. THE SWITCH SHOULD NORMALLY SET AT OFF POSITION.

WHEN THE SWITCH IS SET AT ON, THE FOLLOWING FUNCTIONS ARE AVAILABLE.

- STORING AND EDITION OF PROGRAM.
- RESETTING OF COORDINATE SYSTEM

WHEN THE SWITCH ZERO RETURN IS PRESSED WITH X, Y OR Z AXIS SPECIFIED, THE ABSOLUTE VALUE OF THE CORRESPONDING AXIS TURN TO "O".

SETTING OF TOOL POSITION OFFSET, TOOL DIAMETER OFFSET AND TOOL SETTING UP.

B、 MODE ENABLE

WHEN CHANGE MODE SELECT SW (42) MUST ON THEN OFF TO CONFIRM MODE CHANGE.

PROGRAM START /
FEED HOLD DESCRIPTION

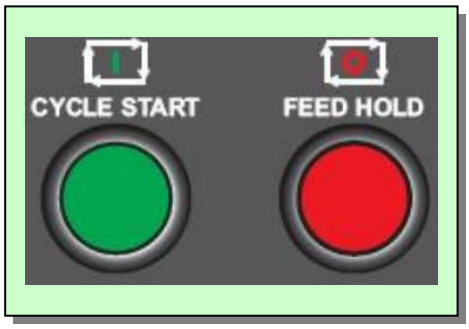

CYCLE START

THIS IS A LIGHTING PUSH BUTTON, AND USED TO START OPERATION IN (41) AUTO OR MDI OPERATION MODE. WHEN THE PUSH BUTTON IS PRESSED, THE LAMP IN THE PUSH BUTTON LIGHTS.

THE PUSH BUTTON IS PRESSED TO RESTART OPERATION AFTER OPERATION STOP WHEN THE PUSH BUTTON FEED HOLD (37) OR SINGLE BLOCK (9) IS OPERATED, OR WHEN OPERATION MODE IS CHANGED.

FEED HOLD

THIS PUSH BUTTON IS USED TO STOP OPERATION IN AUTO OR MDI OPERATION MODE. WHEN THE PUSH BUTTON IS PRESSED, THE LAMP IN THE PUSH BUTTON CYCLE START GOES OUT. WHEN THE PUSH BUTTON IS PRESSED IN THE COURSE OF COORDINATE DISPLACEMENT, THE MOVEMENT IS DECELERATED AND STOPS WHILE THE OPERATION DOES NOT IMMEDIATELY STOP,

WHEN THE PUSH BUTTON IS DEPRESSED DURING EXECUTION OF M, S OT T FUNCTION, BUT STOPS AFTER THE COMPLETION OF THE FUNCTION. THE PUSH BUTTON IS NOT EFFECTIVE DURING TAPPING CYCLE (G84), (G74) OR DWELL (G04). HOWEVER OPERATION IS STOPPED DURING EXECUTION OF CANNED CYCLE BY OPERATING THE PUSH BUTTON SINGLE BLOCK, THE LAMP IN THE PUSH BUTTON LIGHTS INDICATING THE EXECUTION PUSH BUTTON LIGHTS INDICATING THE EXECUTION OF THE CANNED CYCLE.

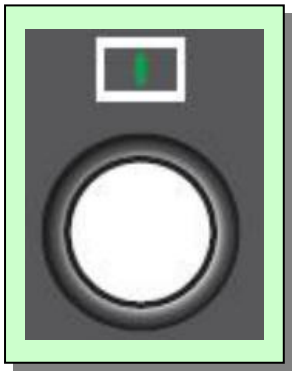

Ready and program protection key button

After press "power control on" button, press this button to make machine ready to be operated.

HANDWHEEL DESCRIPTION

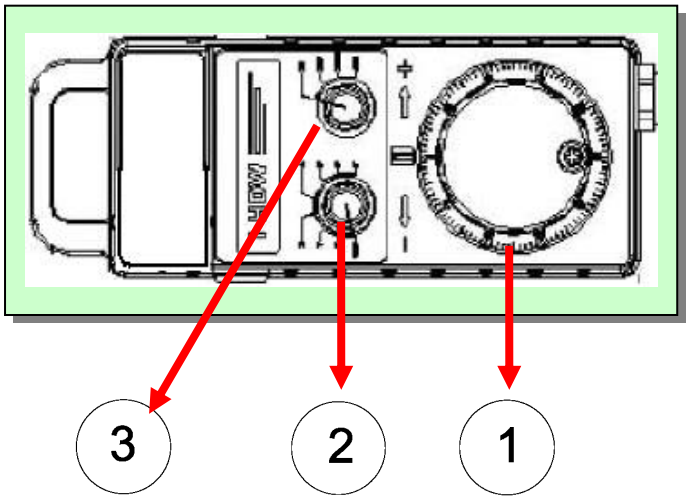

1. HANDWHEEL FUNCTION AS ON PANEL
2. AXIS SELECT SWITCH TO SELECET AXIS IN MANUAL MODE
3. HANDWHEEL SCALE MULTIPLE

SIGNAL LIGHT DESCRIPTION

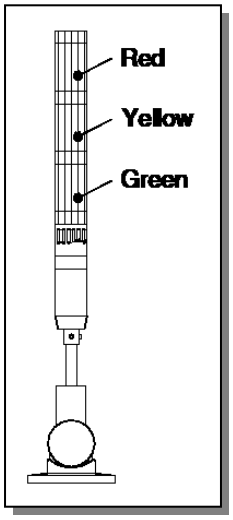

SIGNAL LIGHT AND BUZZER

A. RED (BLANKING): ALARM SIGNAL (SUCH AS OVER LOAD, LUBRICATION LOW, AIR LOW, NC ALARM, BATTERY ALARM) ELIMINATE ALARM TO CUT SIGNAL.

B. YELLOW (BLANKING): PROGRAM END (M00/M01/M30) PUSH

FEED HOLD SWITCH TO CUT SIGNAL.

C. GREEN (BLANKING): PROGRAM EXECUTING.

STATUS LAMPS DESCRIPTION

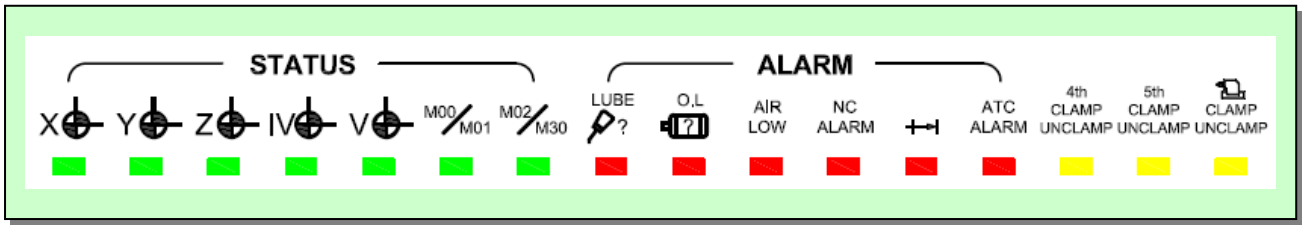

LAMP X Y Z IV AND V AXIS ZERO POSITION

THE LAMP INDICATES THAT THE TABLE (X AXIS). SADDLE (Y AXIS) AND SPINDLE HEAD (Z AXIS) ARE AT THE REFERENCE POINT (COORDINATE ZERO). THE LAMP LIGHTS WHEN REFERENCE POINT IS COMPLETED BY MANUAL OPERATION, OR RETURN TO REFERENCE POINT (G28). OR REFERENCE POINT RETURN CHECK (G27). THE LAMP GOES OUT WHEN THE TABLE, SADDLE OR SPINDLE OR SPINDLE HEAD LEAVES THE REFERENCE POINT.

M02/M30	**PROGRAMFINISH** WHEN PROGRAM EXECUTE M02 OR M30 THIS LAMP LIGHTS

M00/M01	**LAMP OPTIONAL STOP** THE LAMP LIGHTS WHEN THE PROGRAM RUNS TO THE OPTIONAL STOP (M01) OR THE PROGRAM RUNS TO THE END (M00) , ·
LUBE ?	**LAMP LUBRICATION LEVEL (FAILURE)** IF AMOUNT OF LUBRICATING OIL DECREASES TO ABOUT ONE FOURTH OF THE LUBRICATING OIL TANK CAPACITY, THE LAMP LIGHTS. SINCE THE MACHINE DOES NOT STOP AUTOMATICALLY WHEN THE LAMP LIGHTS, IMMEDIATELY STOP THE MACHINE AND REPLENISH NECESSARY AMOUNT OF OIL WHEN THE IS FOUND LIGHTING. WHEN THE OIL TANK IS FILLED. THE LAMP GOES OUT.
O.L ?	**LAMP OVERLOAD ·** THE LAMP LIGHTS IF OVERLOAD OCCURS WITH THE COOLANT PUMP, LUBRICATION PUMP OR ATC MAGAZINE DRIVE MOTOR. SINCE THE MACHINE DOES NOT STOP AUTOMATICALLY WHEN THE LAMP LIGHTS, STOP THE MACHINE IMMEDIATELY AND EXAMINE THE THERMAL RELAYS FOR CAUSE IF THE LAMP LIGHTS. TO RESUME THE OPERATION, ELIMINATE THE CAUSE OF THE OVERLOAD.
AIR LOW	**LAMP AIR PRESSURE (FAILURE)** THE LAMP LIGHTS IF COMPRESSED AIR PRESSURE GOES DOWN BELOW 4 bar . THE ALARM BUZZER ALSO SOUNDS AND TOOL CHANGE BECOMES IMPOSSIBLE WHEN THIS LAMP LIGHTS. WHEN THE LAMP LIGHTS, STOP THE MACHINE OPERATION, CHECK AIR PRESSURE IN THE PNEUMATIC UNIT THROUGH PRESSURE GAUGE AND AIR PRESSURE TO 5.5 bar .THEN PRESS CYCLE START TO CANCEL ALM.
NC ALARM	**LAMP NC ALARM** WHEN GENERATE SEQUENCE ERROR, THIS LAMP LIGHTS
	OT DETECT WHEN X, Y, Z OR 4TH AXIS DETECT THE HARDWARE OVERTRAVEL THIS LAMP LIGHTS

`

ATC ALARM	WHEN ATC NOT INPOSITION, THIS LAMP LIGHTS
4th CLAMP UNCLAMP	Clamp of the 4th axis
5th CLAMP UNCLAMP	Clamp of the 5th axis.

Manual tool holder clamp/unclamp button

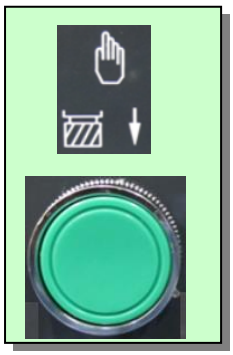

TOOL CLAMP / UNCLAMP

INFRONT OF THE SPINDLE,

IN MANUAL MODE, PUSH TO UNCLAMP TOOL, RELEASE TO CLAMP.

(IN DOOR OPEN STATUS)

1.2 LCD CONTROLPANEL FUNCTION

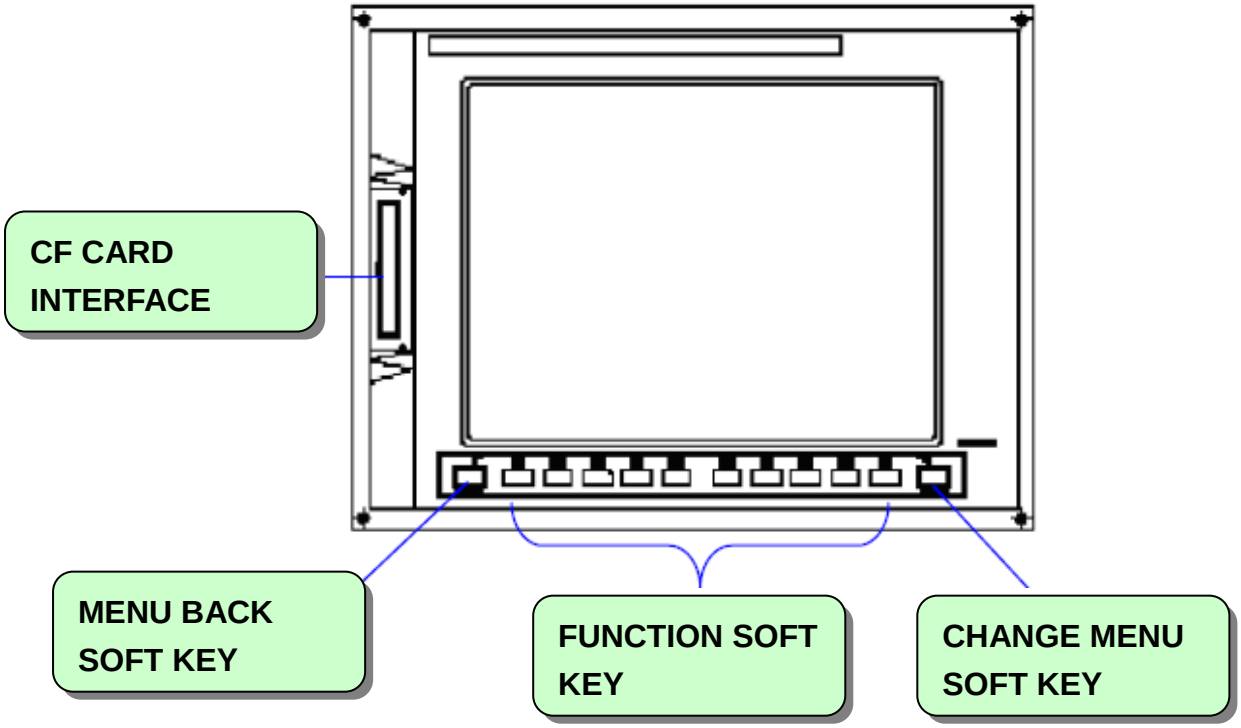

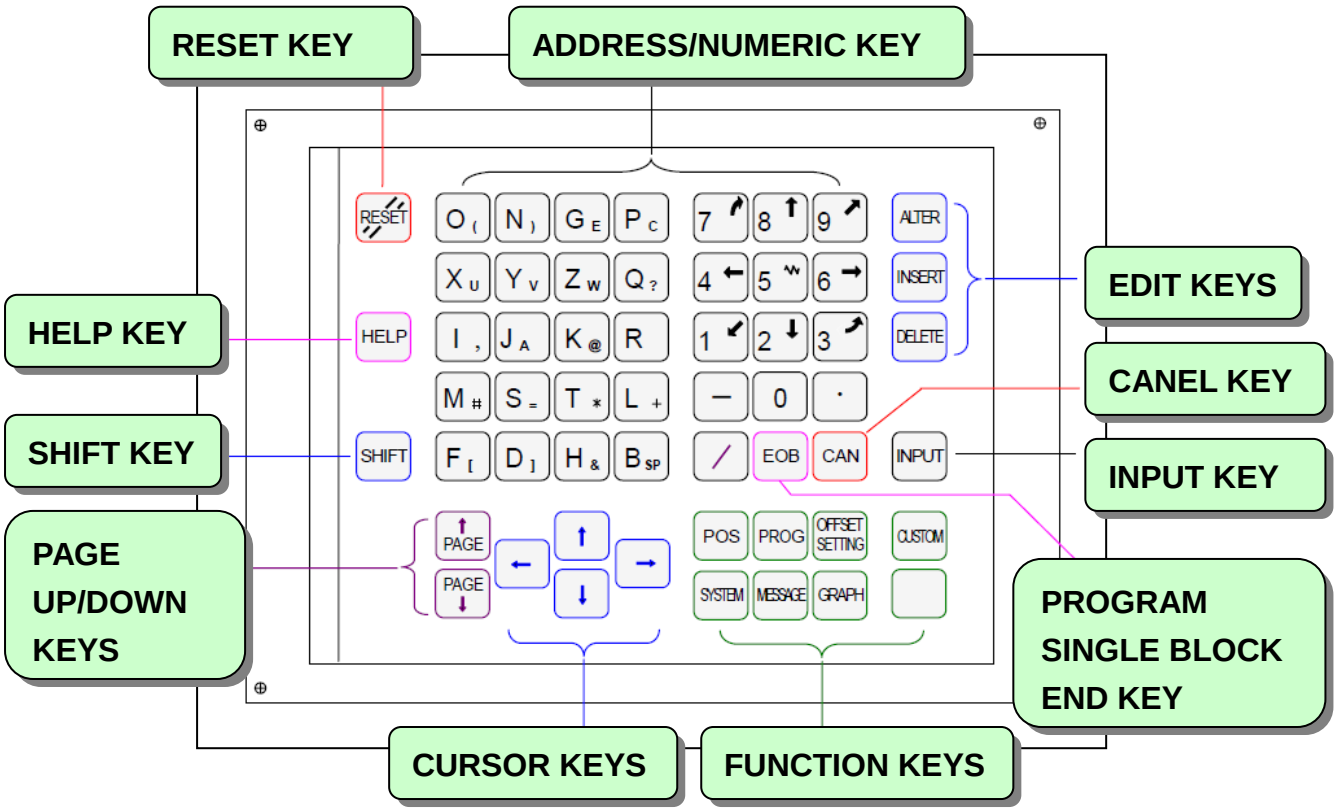

EXPLANATION OF THE KEYBOARD

No.	Key	Function
(1)	Reset key RESET	Used to reset the CNC to release an alarm or other similar state.
(2)	Help key HELP	Used to get help with operations such as for the MDI keys, when the operator does not know what to do next.
(3)	Soft keys	The soft keys are assigned different functions depending on the application. The functions currently assigned to the soft keys are displayed on the lowermost line of the screen.
(4)	Address/numeric keys N) 4 ← ...	Used to enter letters and numbers.
(5)	Shift key SHIFT	Some of the address keys have two different letters. When the shift key is pressed first before pressing one of these address keys, the lower-right letter is input. When the shift key is pressed, ^ is displayed in the key input buffer indicating that the lower-right letter will be input.
(6)	Input key INPUT	Data input by pressing an address or numeric key is stored in the key input buffer, then displayed. When data input to the key input buffer needs to be written to the offset register, press the <INPUT> key. This key is equivalent to soft key [INPUT]. Either key may be used.
(7)	Cancel key CAN	Used to delete letters or numbers input to the key input buffer. Example) When N001X100Z is displayed on the key input buffer, pressing the cancel key deletes the letter Z, and N001X100 is displayed.
(8)	Edit keys ALTER INSERT DELETE	Used to edit programs. ALTER : Alter INSERT : Insert DELETE : Delete
(9)	Function keys POS PROG ...	Used to switch screens for each function.

No.	Key	Function
(10)	Cursor keys	Four cursor keys are provided. : Moves the cursor to the right or forwards in small units. : Moves the cursor to left or backwards in small units. : Moves the cursor downward or forwards in large units. : Moves the cursor upward or backwards in large units.
(11)	Page-up/down keys PAGE PAGE	Page-up and page-down keys are provided. PAGE : Used to display the next page. PAGE : Used to display the previous page.

Explanation of the Function Keys

The function keys select what is displayed. Each function is divided into sub-functions, and the sub-functions are selected by soft keys.

There are six function keys : POS , PROG , OFFSET SETTING , SYSTEM , MESSAGE , and GRAPH .

POS : Displays the current position.

PROG : Displays and edits a program stored in memory.

OFFSET SETTING : Displays an offset value, offset from the workpiece zero point, custom macro variable, and tool life management data. Allows data to be input into these items.

SYSTEM : Displays and sets a parameter and pitch error compensation value, and displays self diagnostic data.

MESSAGE : Displays an alarm message, external operator message, external alarm message, and alarm history.

GRAPH : Displays graphic data.

Explanation of the Soft Keys

The MDI panel has 10 soft keys (or 5 soft keys), a next-menu key on the right, and a previous-menu key on the left. The next menu key and previous menu key are used to select the functions of the soft keys.
These soft keys can be assigned with various functions, according to the needs.
The following functions are mainly available via the MDI panel:

- Actual position display
- Contents of program display, program directory display (display of program number, program name, part program storage length left, number of programs left)
- Program editing
- Offset amount display and setting
- Commanded value display, MDI input
- Parameter setting and display
- Alarm message/operator message display
- Custom macro variables display and setting
- Tool life management data display and setting
- Diagnosis
- Others

This manual may refer to a display device with 10 + 2 soft keys as a 12 soft key type, and a display device with 5 + 2 soft keys as a 7 soft key type.

2. M_CODE LIST

2.1 M_CODE LIST SELECT

SPINDLE

M Code	Define
M03	Spindle CW
M04	Spindle CCW
M05	Spindle stop
M19	Spindle orientation
M29	Rigid tapping

PROGRAMMING

M Code	Define	M Code	Define
M00	Program Stop	M24	A axis mirror image
M01	Optional program stop	M30	Program End
M02	Program end	M46	Override cancel
M21	X axis mirror image on	M98	Call sub-program
M22	Y axis mirror image on	M99	Program re-start / Return to main program
M23	Mirror image off		

COOLANT

M Code	Define	M Code	Define
M07	Cutting air blow on	M15	High pressure coolant chip remove on
M08	Coolant pump on	M16	High pressure coolant chip remove off
M09	Coolant pump off	M48	CTS on
M10	Cutting air blow off	M49	CTS off
M13	Spindle CW and coolant on	M50	Chip conveyor CW
M14	Spindle CCW and coolant on	M51	Chip conveyor stop

TOOL CHANGE

M Code	Define	M Code	Define
M06	Auto tool change	M71	Tool pot down
M41	Magazine extend for M6 macro (T16 and T20)	M72	Arm move to catch tools
M42	Magazine tool command search for M6 macro (T16 and T20)	M74	Arm move to exchange tools
M52	Magazine extend (T16 and T20)	M76	Arm return to home position
M53	Magazine return (T16 and T20)	M77	Tool pot up
M66	Auto tool change start for M6 (T16 and T20)	M90	Magazine search tool number command
M70	Automatic tool data table re-building	M95	Arm trouble shooting

3. SETTING / CHANGING MAVHINE PARAMETER

3.1 DISPLAYING PARAMETERS

Follow the procedure below to display parameters.

1 Press the SYSTEM function key on the MDI as many times as required, or alternatively, press the SYSTEM function key once, then the PARAM section display soft key. The parameter screen is then selected.

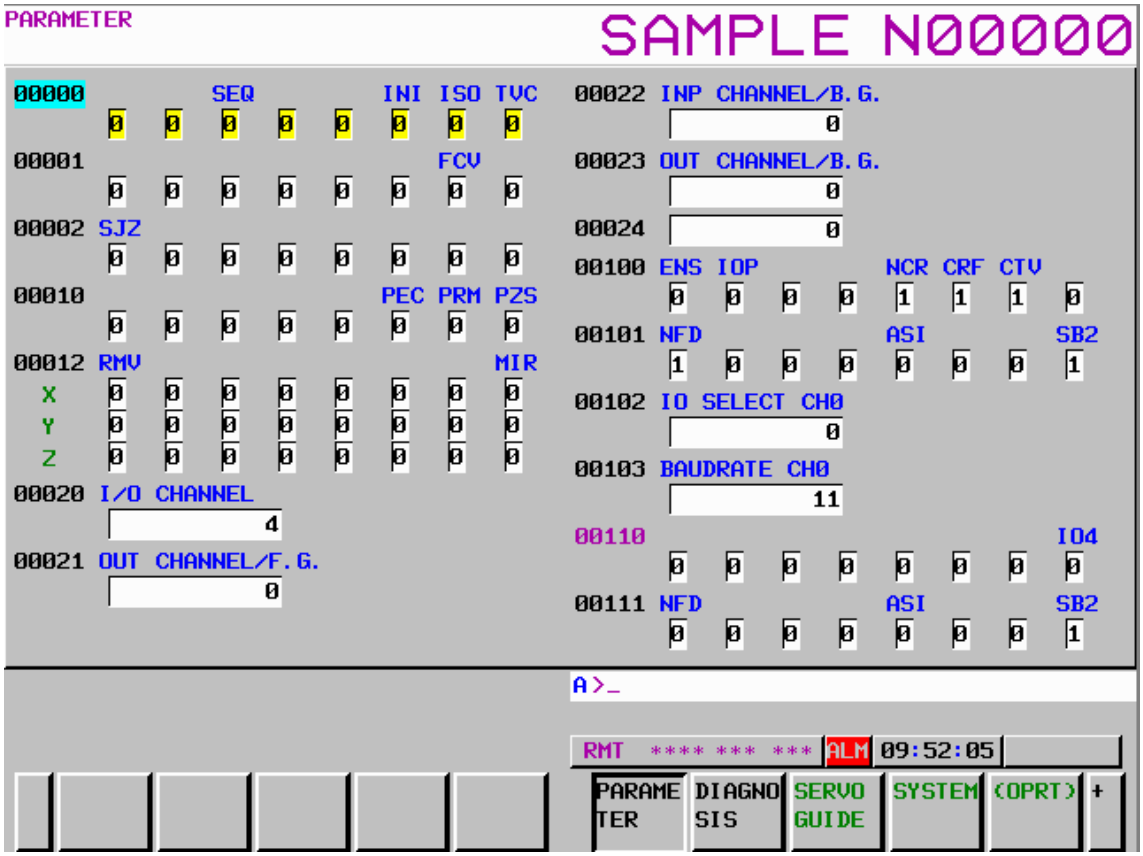

Function keys

2 The parameter screen consists of multiple pages. Use step (a) or (b) to display the page that contains the parameter you want to display.

(a) Use the page select key or the cursor move keys to display the desired page.

(b) Enter the data number of the parameter you want to display from the keyboard, then press the [NO.SRH] soft key. The parameter page containing the specified data number appears with the cursor positioned at the data number. (The data is displayed in reverse video.)

NOTE

If key entry is started with the section select soft keys displayed, they are replaced automatically by operation select soft keys including [NO.SRH]. Pressing the [(OPRT)] soft key can also cause the operation select keys to be displayed.

3.2 SETTING PARAMTERS FROM MDI

Follow the procedure below to set parameters.

1 Place the NC in the MDI mode or the emergency stop state.

2 Follow the substeps below to enable writing of parameters.

2-1 To display the setting screen, press the function key as many times as required, or alternatively press the function key once, then the [SETTING] section select soft key. (The first page of the setting screen appears.)

```
SETTING (HANDY)

PARAMETER WRITE=1 (0:DISABLE 1:ENABLE)
TV CHECK       =0 (0:OFF    1:ON)
OUTPUT CODE    =1 (0:EIA    1:ISO)
INPUT UNIT     =0 (0:MM     1:INCH)
I/O CHANNEL    =  4 (0-35:CHANNEL NO.)
SEQUENCE NO.   =0 (0:OFF    1:ON)
PROGRAM FORMAT =0 (0:NO CNV  1:F15)
SEQUENCE STOP  =        0 (PROGRAM NO.)
SEQUENCE STOP  =       -1 (SEQUENCE NO.)

CONTRAST    ( + =[ ON:1 ] - =[OFF:0 ])
```

2-2 Position the cursor on "PARAMETER WRITE" using the cursor move keys.

2-3 Press the [(OPRT)] soft key to display operation select soft keys.

NO. SRH	ON:1	OFF:0	+INPUT	INPUT

2-4 To set "PARAMETER WRITE=" to 1, press the [ON:1] soft key, or alternatively enter 1 and press the [INPUT] soft key. From now on, the parameters can be set. At the same time an alarm condition (SW0100 PARAMETER WRITE ENABLE) occurs in the CNC.

3 To display the parameter screen, press the SYSTEM function key as many times as required, or alternatively press the SYSTEM function key once, then the PARAM section select soft key. (See Chapter 1, "DISPLAYING PARAMETERS.")

4 Display the page containing the parameter you want to set, and position the cursor on the parameter. (See Chapter 1, "DISPLAYING PARAMETERS.")

5 Enter data, then press the [INPUT] soft key. The parameter indicated by the cursor is set to the entered data.

SETTING (PARAMETER)

00000			SEQ			INI	ISO	TVC
	0	0	0	0	0	0	1	0
00001							FCV	
	0	0	0	0	0	0	0	0
00002	SJZ							
	0	0	0	0	0	0	0	0
00010						PEC	PRM	PZS
	0	0	0	0	0	0	0	0
00012	RMV							MIR
X	0	0	0	0	0	0	0	0
Y	0	0	0	0	0	0	0	0
Z	0	0	0	0	0	0	0	0

Data can be entered continuously for parameters, starting at the selected parameter, by separating each data item with a semicolon (;).

[Example] Entering 10;20;30;40 and pressing the INPUT key assigns values 10, 20, 30, and 40 to parameters in order starting at the parameter indicated by the cursor.

6 Repeat steps (4) and (5) as required.

7 If parameter setting is complete, set "PARAMETER WRITE=" to 0 on the setting screen to disable further parameter setting.

8 Reset the NC to release the alarm condition (SW0100).
If an alarm condition (PW0000 PLEASE TURN OFF POWER) occurs in the NC, turn it off before continuing operation.

4. Opening / Closing doors

4.1 Opening / Closing Splashguard Door

Figure 4.1 position of splashguard door and operation

OPERATE IN DOOR OPEN STATUS WITH NON CE DOOR INTERLOCK SWITCH (OPTION)

A. WHEN NON CE DOOR INTERLOCK SWITCH IS MOUNTED, PRESS THIS KEY 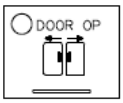

TO RELEASE DOOR INTERLOCK.

B. RELEASE DOOR INTERLOCK IN ANY MODE.

C. CAN OPERATE ONLY IN JOG AND HANDWHEEL MODE WHEN DOOR OPENED

D. DUE TO SAFETY REASON, WHILE DOOR OPEN THE MACHINE CAN ONLY OPERATE IN FOLLOWING STATUS.

   a. SPINDLE SPEED UNDER 50/min

   b. CAN OPERATE ONLY IN JOG AND HANDWHEEL MODE.

   c. AXIS FEED RATE UNDER 2000mm/min.

E. CLOSE DOOR TO RESUME SYSTEM.

OPERATE IN DOOR OPEN STATUS WITH CE DOOR INTERLOCK SWITCH (OPTION)

A. CONDITION IN DOOR OPEN STATUS

   DUE TO CE REGULATION AND SAFETY REASON, WHILE DOOR OPEN THE MACHINE CAN ONLY OPERATE IN FOLLOWING STATUS.

   a. SPINDLE SPEED UNDER 50 /min.

   b. CAN OPERATE ONLY IN JOG AND HANDWHEEL MODE.

   c. AXIS FEEDRATE UNDER 2000 mm/min

B. HOW TO OPERATE IN DOOR OPEN STATUS

   a. PUSH DOOR OPEN 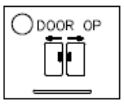

BUTTON.

   b. AFTER ENABLE THIS BUTTON, THE LAMP IN THE BUTTON LIGHTS.

      NOTICE: ONCE YOU PUSH THIS BUTTON, YOU MUST EXCUTE OPEN AND CLOSE DOOR PROCEDURE TO RESUME THE SYSTEM.

   c. OPEN THE DOOR.

   d. CLOSE DOOR TO RESUME SYSTEM.

C. MOVE THE AXIS OR TURN THE SPINDLE IN MANUAL MODE.

a. SWITCH KEY 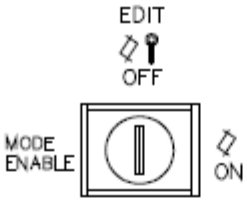

TO MODE ENABLE.

b. SWITCH MODE

TO "MANUAL" (HANDLE, JOG.)

NOTE: MAKE SURE NOW MAGAZINE ON INITIAL POSITION.

c. BEFORE ANY MOVEMENT, KEEP PUSHING THE PERMISSIVE BOTTON 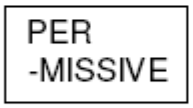

- FOR MACHINE WITH REMOVEABLE HANDWHEEL, THE BUTTON IS ON THE SIDE OF THE HANDWHEEL.
- FOR MACHINE WITHOUTREMOVEABLE HANDWHEEL, THIS BUTTON IS ON THE OPERATION PANEL.

d. DURING ANY MOVEMENT, YOU MEST KEEP PUSHING PERMISSIVE BUTTON TO ENABLE THE MOVEMENT.

NOTICE: DON'T RELEASE THE PERMISSIVE BUTTONS BEFORE STOP THE MOVEMENT. IT WILL CAUSE THE FAILURE OF THE MOVEMENT.

5. TURNING ON / OFF POWER SUPPLY

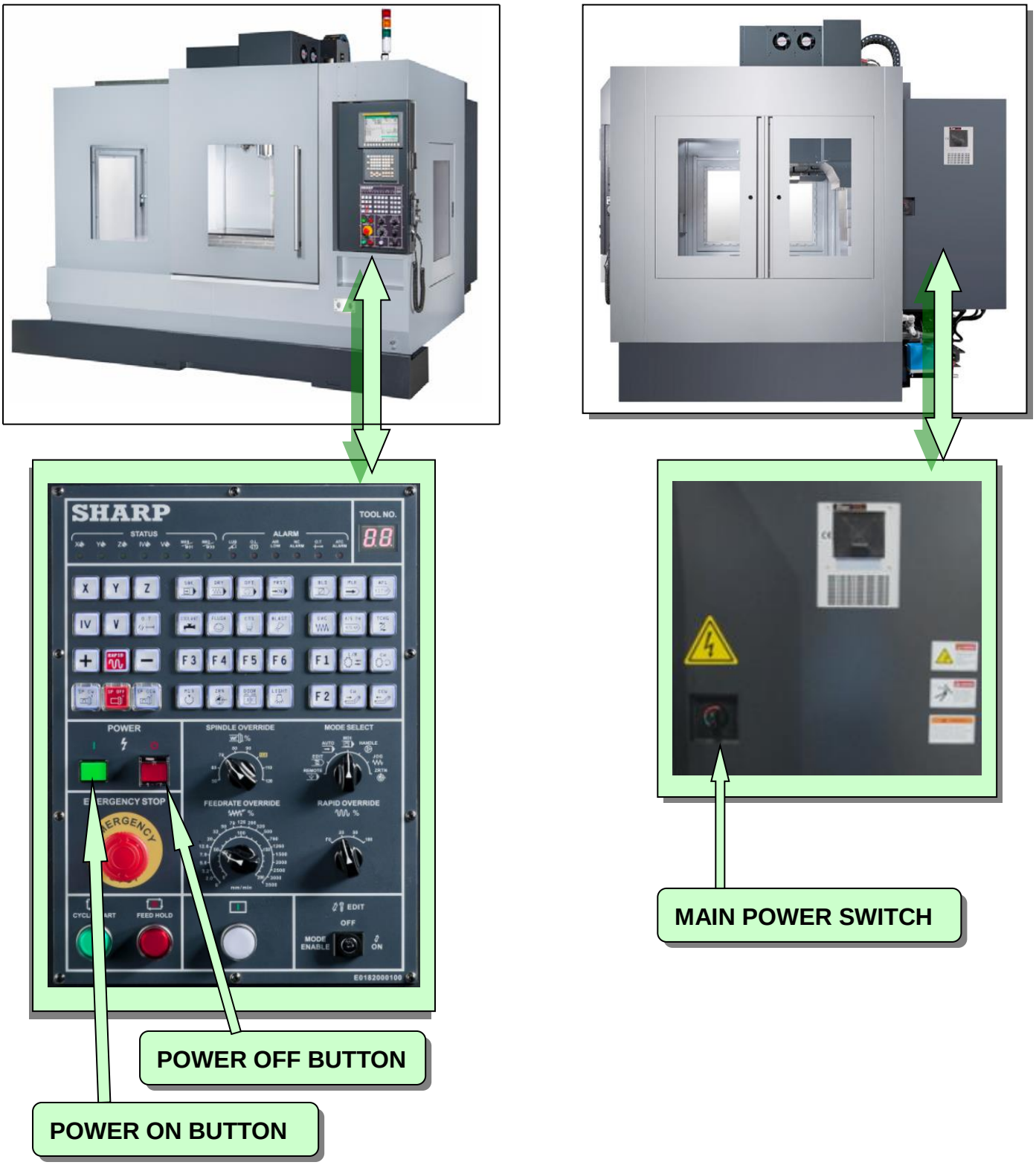

Figure 5.1 LOCATION OF POWER SUPPLY SWITCH AND BUTTON

SWITCHING ON THE POWER SOURCE TO MACHINE

D. HOLD DOWN THE PUSH BUTTON POWER ON THE NC OPERATION PANEL FOR 2 OR 3 sec. THE POWER SOURCE WILL BE GIVEN THROUGHOUT THE MACHINE.

E. REFERRING TO THE DESCRIPTION OF CHECKING BEFORE STARTING THE MACHINE IN DAILY CHECKING BEFORE STARING THE MACHINE IN DAILY CHECKING SCHEDULE 6.1, MAKE SURE NO TROUBLE IS FOUND IN THE MACHINE AND THEN START THE OPERATION.

MOVE AXIS TO REFERENCE POINT (MANUALLY)

MOVE SPINDLE HEAD (Z AXIS), SADDLE (Y AXIS), TABLE (X AXIS)TO THE REFERENCE POINT (COORDINATE ZERO)

A. SWITCH KEY

TO MODE ENABLE

B. SET THE MODE SWITCH

TO ZRTN POSITION.

C. SET THE SWITCH "RAPID OVERRIDE" 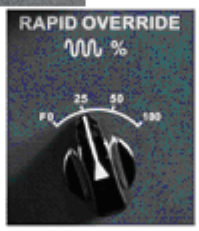

TO 25%.

D. PRESS THE PUSH BUTTON

UNTIL THE ZERO (REFERENCE POINT) LAMP "Z" LIGHTS (THEN,

FOR X AXIS AND

FOR Y AXIS)

SWITCHING OFF THE POWER SOURCE

TO TURN OFF, PROCEED AS FOLLOW:

A. MAKE SUR THE FRONT DOOR IS CLOSED

B. MAKE SURE THAT THE LAMP OF THE CYCLE START ON PUSH BUTTON ON THE OPERATION PANEL DOES NOT LIGHT.

C. MAKE SURE THAT ALL MOVABLE PARTS OF THE MACHINE ARE IN STANDSTILL.

D. WHEN TAPE PUNCH UNIT (ASR33 OR RS-232C) IS USED, TURN OFF THE UNIT.

E. THEN HOLD THE PUSH BUTTON POWER OFF ON THE NC OPERATION PANEL FOR 1 OR 2 SEC.

F. TURN OFF THE POWER SWITCH ON THE ELECTRIC BOX.

6. DATA REGISTRATION / EDITING

6.1 NC Program Registration (3 Methods)

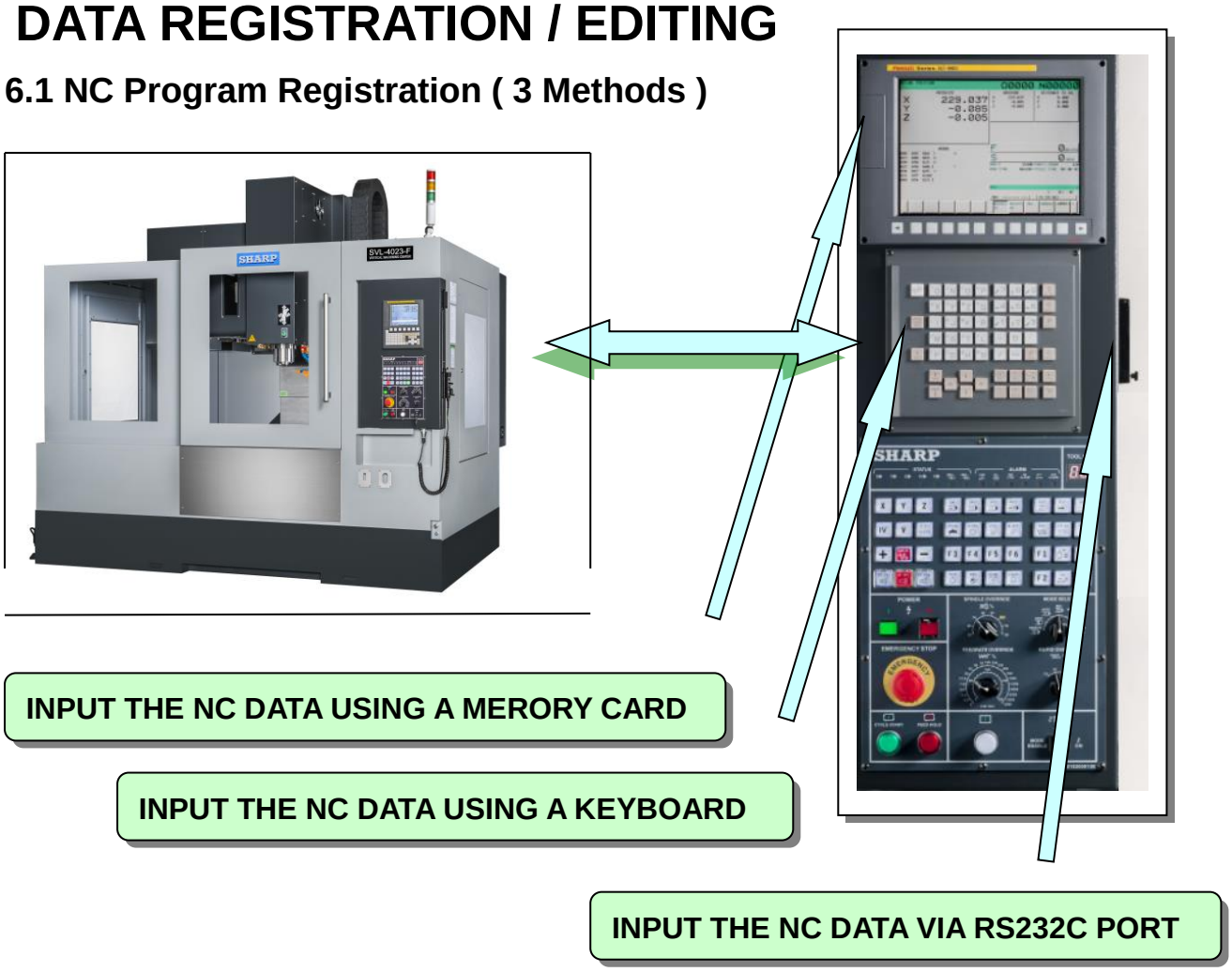

Figure 6.1 POSITION OF RS232C POART / MEMORY CARD INTERFACE / KEYBOARD

6.2 Tool Offset Registration

Press function key to display or set tool compensation values and other data.
This section explains how to display and specify the following:

1. Tool compensation value
2. Tool length measurement

Refer to the User's Manual (Common to Lathe System/Machining Center System) (B-64304EN) for explanations about how to display or specify the other types of data.

Setting and Displaying the Tool Compensation Value

Tool offset values, tool length compensation values, and cutter compensation values are specified by D codes or H codes in a program. Compensation values corresponding to D codes or H codes are displayed or set on the screen.
There are two tool offset memory types, A and C.

Procedure for setting and displaying the tool compensation value

Procedure

1 Press function key .

2 Press chapter selection soft key [OFFSET] or press function key several times until the tool compensation screen is displayed.
The screen varies according to the type of tool compensation memory.

Tool Compensation Memory A

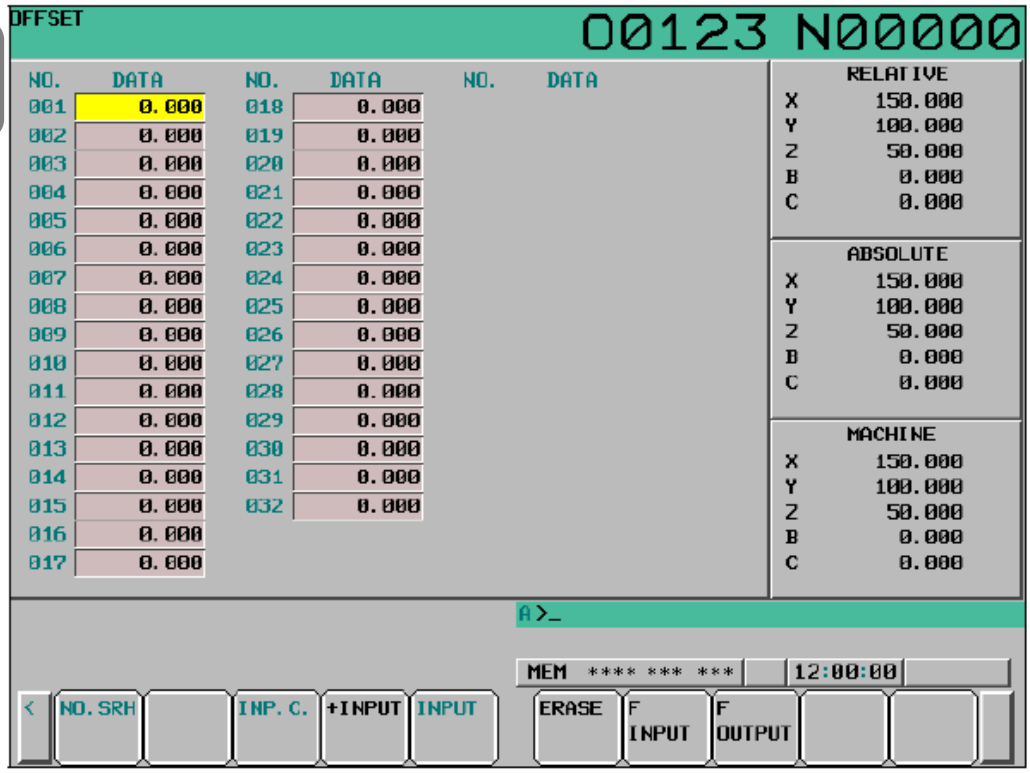

Tool Compensation Memory C

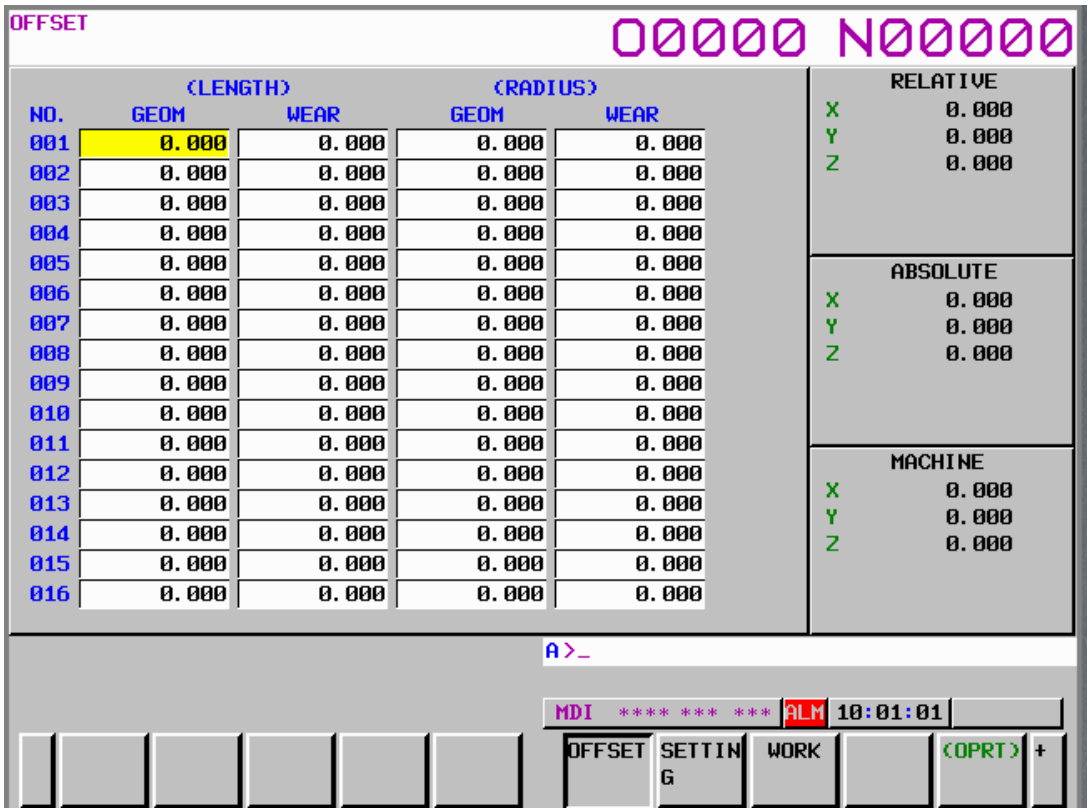

3 Move the cursor to the compensation value to be set or changed using page keys and cursor keys, or enter the compensation number for the compensation value to be set or changed and press soft key [NO.SRH].

4 To set a compensation value, enter a value and press soft key [INPUT].
To change the compensation value, enter a value to add to the current value (a negative value to reduce the current value) and press soft key [+INPUT]. Or, enter a new value and press soft key [INPUT].

Explain

- Decimal point input

A decimal point can be used when entering a compensation value.

- Other setting method

An external input/output device can be used to input or output a tool offset value. See Chapter III-8 in User's Manual (Common to T/M). A tool length compensation value can be set by measuring the tool length as described in the next subsection.

- Tool compensation memory

There are tool compensation memories A and C, which are classified as follows:

Tool compensation memory A

D codes and H codes are treated the same. Tool geometry compensation and tool wear compensation are treated the same.

Tool compensation memory C

D codes and H codes are treated differently. Tool geometry compensation and tool wear compensation are treated differently.

Bit 6 (NGW) of parameter No. 8136 can be used to specify whether to use tool offset memory C ("0" for specifying to use it and "1" for specifying not to use it). If tool offset memory C is not used, tool offset memory A is used.

6.3 Number Of Tool Offset Value

Bit 5 (NDO) of parameter No. 8136 can be used to specify whether to use 400 tool offset values ("0" for specifying to use 400 tool offset values and "1" for specifying not to use them). If the number of tool offset values to be used is not 400, the number of tool offset values to be used is 32.

- Disabling entry of compensation values

The entry of compensation values may be disabled by setting bit 0 (WOF) and bit 1 (GOF) of parameter No.3290 (not applied to tool compensation memory A).

In this case, it is possible to prohibit any range of tool offset values from being entered from the MDI by setting the start tool offset value number in parameter No. 3294 and the quantity of offset values counted from the beginning of the range in parameter No.3295.

If an attempt is made to enter tool offset values including those prohibited, the following occur:

1) When compensation values are input consecutively from offset numbers for which the input of values is enabled to offset numbers for which the input of values is inhibited, a warning is issued, but the compensation values in the range of the offset numbers for which the input of values is enabled are set.
2) When compensation values are input consecutively from offset numbers for which the input of values is inhibited to offset numbers for which the input of values is enabled, a warning is issued and the compensation values are not set.

6.4 Registration Of Workpiece Offset Value

Displaying and Setting the Workpiece Origin Offset Value

Procedure for displaying and setting the workpiece origin offset value

Procedure

1 Press function key .

2 Press chapter selection soft key [WORK].
The workpiece coordinate system setting screen is displayed.

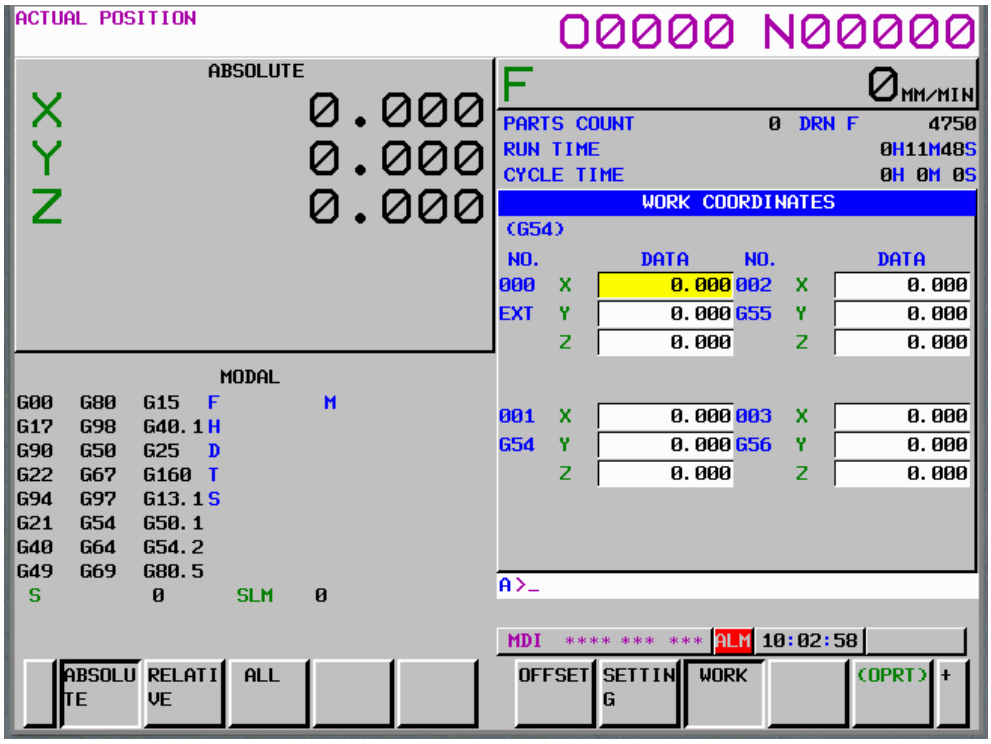

3 The screen for displaying the workpiece origin offset values consists of two or more pages.
Display a desired page in either of the following two ways:

- Press the page key [PAGE ⇧] or [PAGE ⇩].
- Enter the workpiece coordinate system number (0 : external workpiece origin offset, 1 to 6: workpiece coordinate systems G54 to G59) and press operation selection soft key [NO.SRH].

4 Turn off the data protection key to enable writing.
5 Move the cursor to the workpiece origin offset to be changed.
6 Enter a desired value by pressing numeric keys, then press soft key [INPUT]. The entered value is specified in the workpiece origin offset value. Or, by entering a desired value with numeric keys and pressing soft key [+INPUT], the entered value can be added to the previous offset value.

7 When performing counter input, enter the axis name in the key-in buffer and press soft key [C INPUT] to set the relative coordinates of the specified axis.
8 Repeat steps 5, 6, and 7 to change other offset values.
9 Turn on the data protection key to disable writing.

Direct Input of Workpiece Origin Offset Value Measured

This function is used to compensate for the difference between the programmed workpiece coordinate system and the actual workpiece coordinate system. The measured offset for the origin of the workpiece coordinate system can be input on the screen such that the command values match the actual dimensions.
Selecting the new coordinate system matches the programmed coordinate system with the actual coordinate system.

Procedure for direct input of workpiece origin offset value measured

Procedure

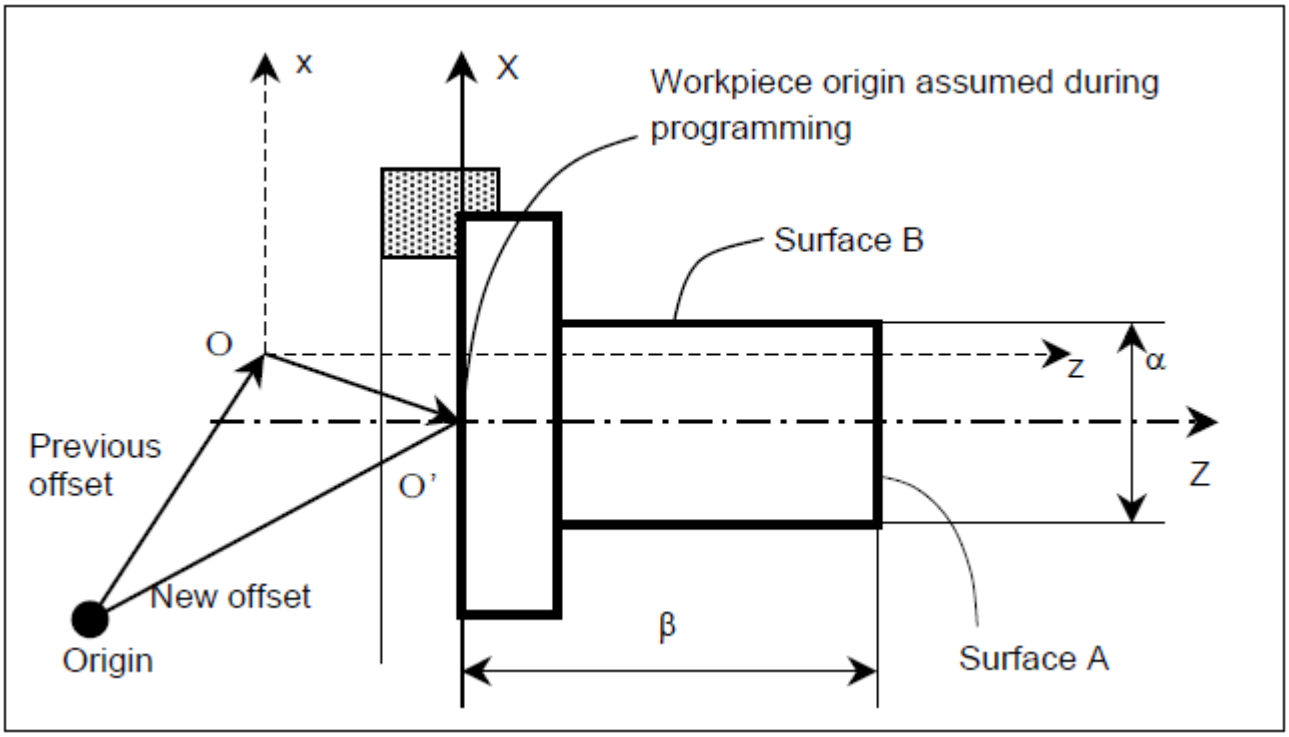

1 For the workpiece shown above, cut surface A in manual operation.

2 Retract the tool only in the X-axis direction without moving the Z-axis and stop the spindle.

3 Measure distance β between surface A and the programmed origin of the workpiece coordinate system as shown above.

4 Press function key .

5 To display the WORK COORDINATES screen, press the chapter selection soft key [WORK].

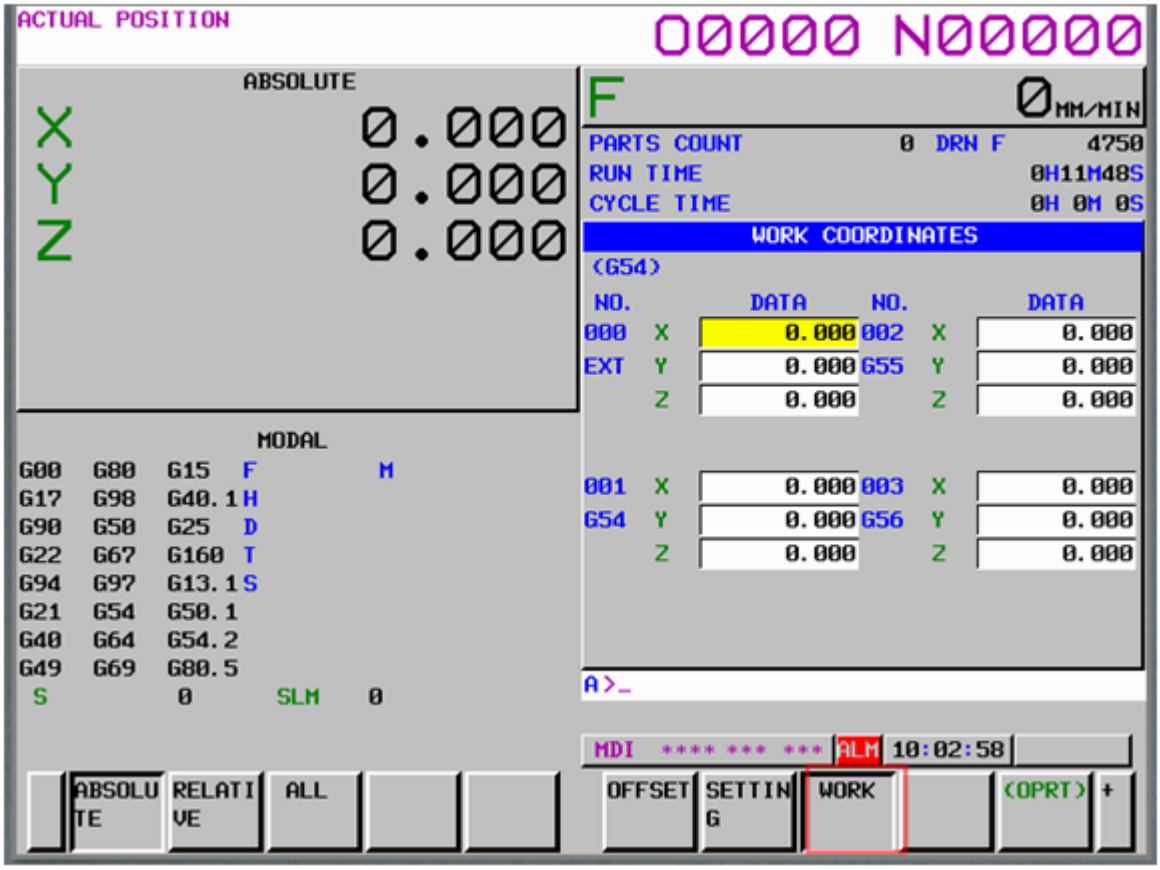

6 Position the cursor to the workpiece origin offset value to be set.

7 Press the address key for the axis along which the offset is to be set (Z-axis in this example).

8 Enter the measured value (β) then press soft key [MEASUR].

9 Cut surface B in manual operation.

10 Retract the tool only in the Z-axis direction without moving the X-axis and stop the spindle.

11 Measure diameter α of surface B and enter this value directly as the X value as described in Steps 7 and 8.

7. WORKPIECE SETTING

- Workpiece attachment and detachment

  ☞ 1. WORKPIECE ATTACHMENT AND DETACHMENT

- Workpiece restrictions

  ☞ 2. WORKPIECE RESTRICTIONS

1. WORKPIECE ATTACHMENT AND DETACHMENT ☞ 1-1

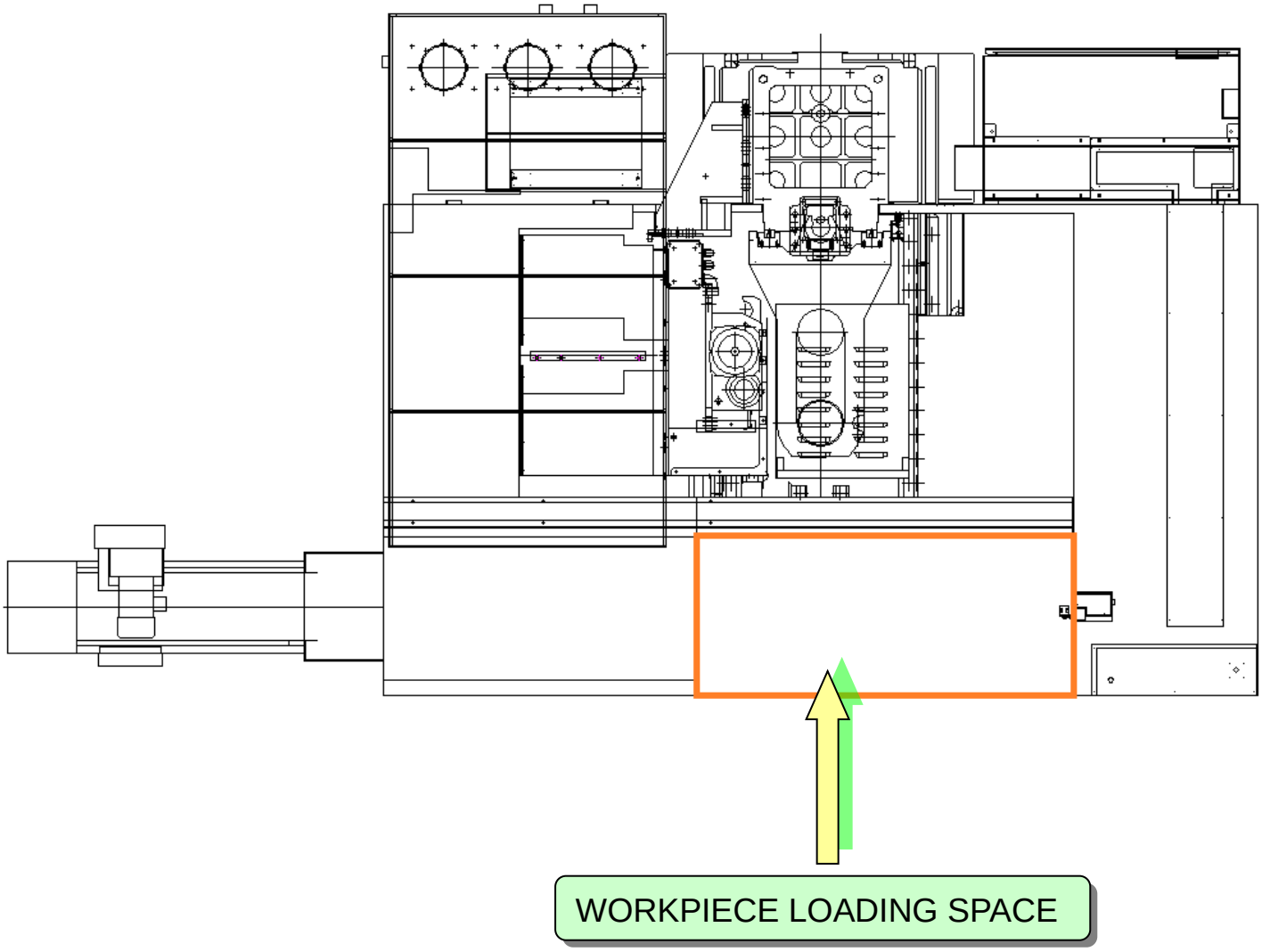

Figure 1-1 POSITION OF WORKPIECE ATTACHMENT AND DETACHMENT

2. WORKPIECE RESTRICTIONS

1) Load Capacity：1000Kgs
2) Table size：Shown in Figure 8.2

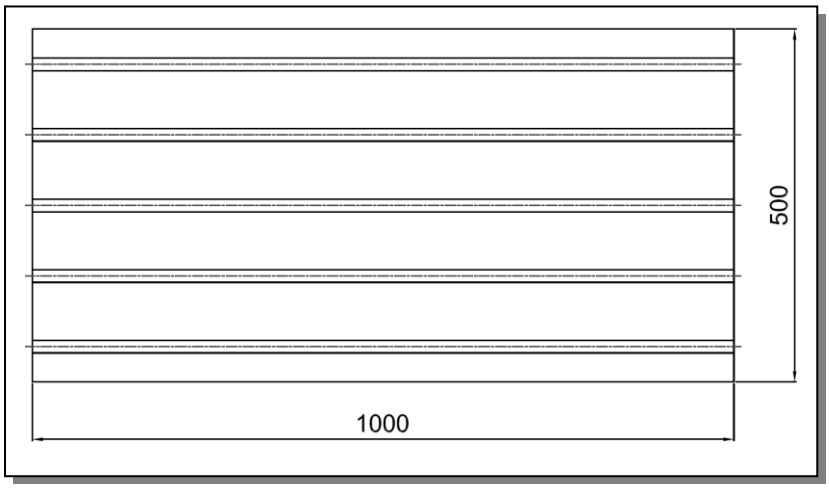

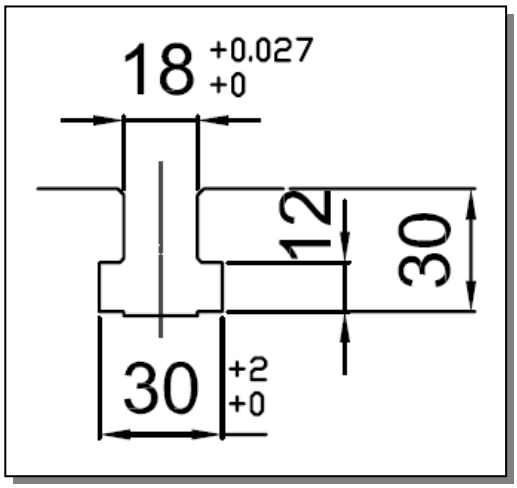

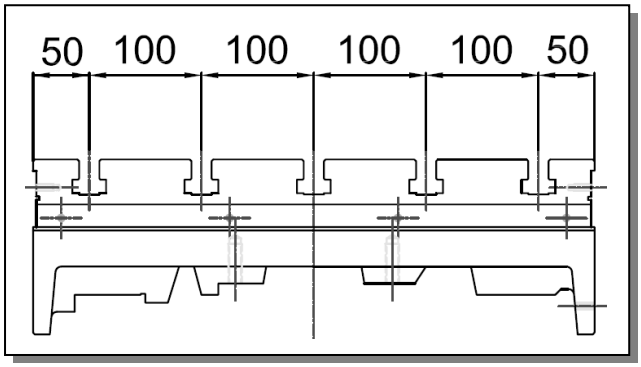

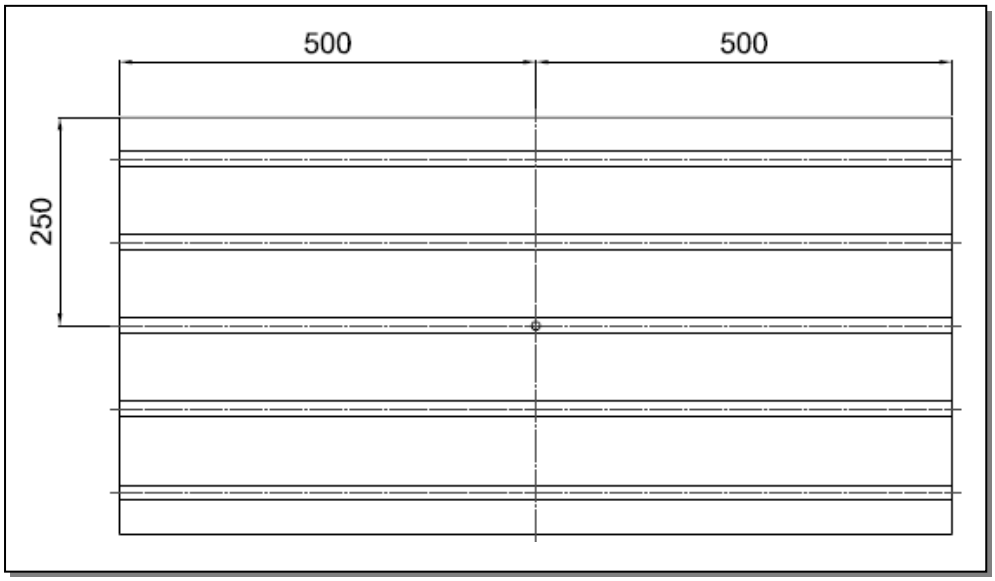

Figure 8.2 WORKPIECE RESTRICTIONS

8. TOOL PREPARATIONS

8.1 Tool Attachment and Detachment ☞ Figure 1-1)

1) Make sure the spindle is at a complete stop and ready for a tool change .
2) Firmly insert the tool in the spindle .
3) Press the tool clamp / unclamp button (Figure 1-2) on the front of the head .
4) Release the tool clamp / unclamp button .
5) Maker sure the tool is completely and correctly inserted before releasing the tool .

Figure 1-1 Tool Attachment and Detachment

Figure 1-2 Tool clamp / unclamp button

8.2 Tool storage limitations

Items	Maximum Value
Storage Capacities	24 Tools
Maximum Tool Diameter Allowed for Continuous Mounting	125(4.9) mm(inch)
Maximum Tool Diameter with Adjacent Post Empty	200(7.8) mm(inch)
Maximum Tool Length	300 (11.8) mm(inch)
Maximum Tool Weight	6 (13.2) kg(lb)

8.3 Tool And Retention Stud combinations

BT SHANK

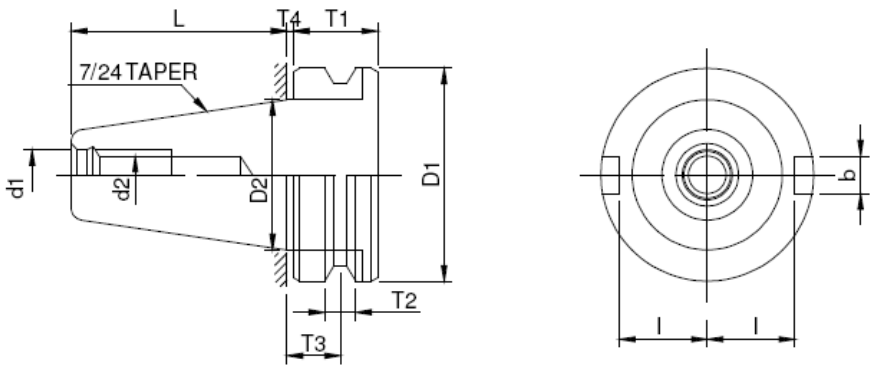

Unit ：mm

Model No.	D1	D2	d1	d2	L	T1	T2	T3	T4	b	l
BT 40	63	44.45	17	M16	65.4	25	10	16.6	2	16.1	22.6

BT40 STUD

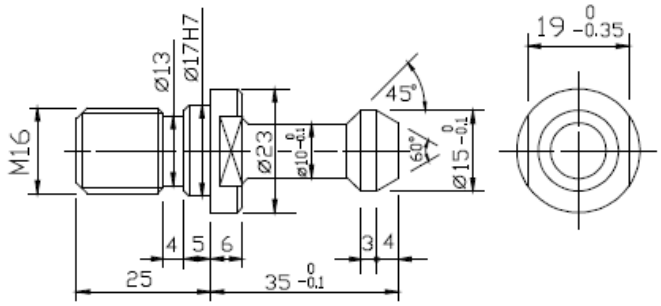

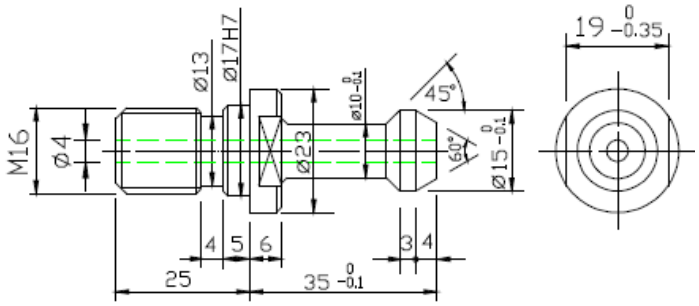

Cooling though spindle

CAT SHANK

(ANSI B5.50-78)

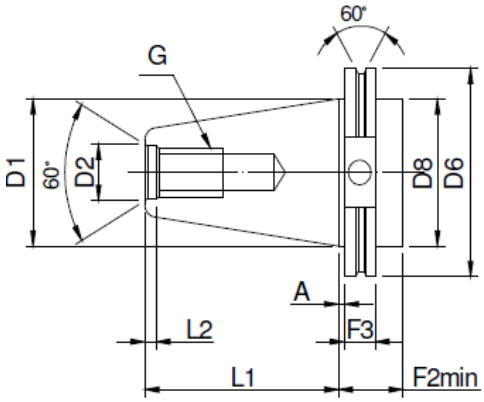

Unit：mm

Model No.	D1	D2	D6	D8	L1	L2	F2	F3	A	G
CAT 40	1.750 (44.45)	0.641 (16.28)	2.5 (63.05)	1.75 (44.45)	2.687 (68.25)	0.188 (4.78)	1.375 (35.00)	0.625 (15.88)	0.125 (3.18)	5/8-11 thread

CAT 40 STUD

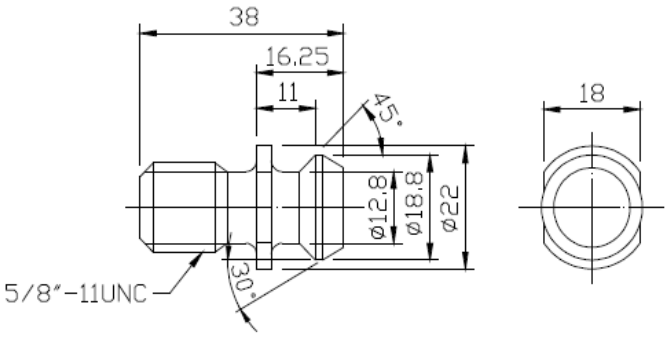

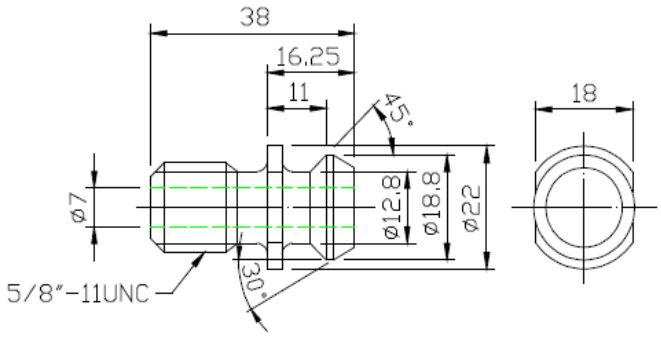

Cooling though spindle

DIN 69871A SHANK

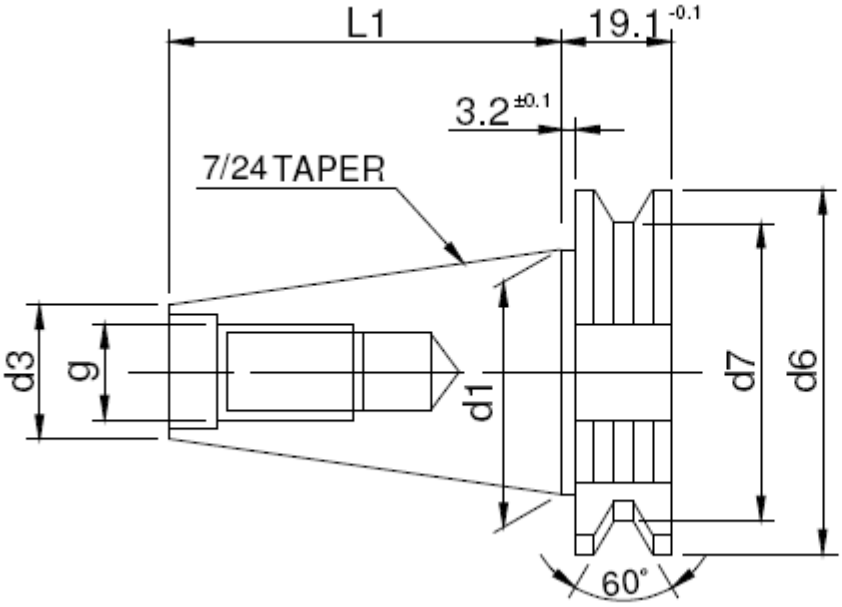

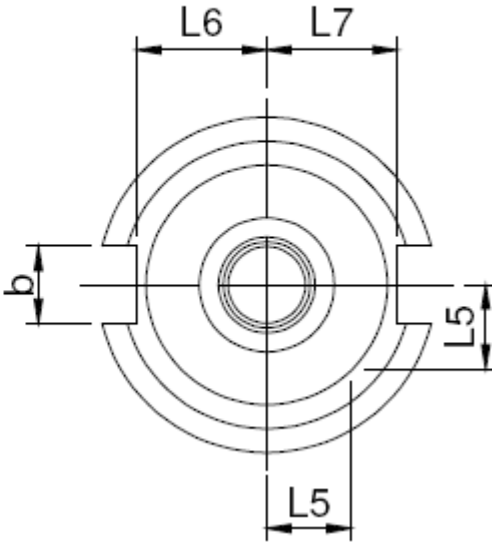

Unit ：mm

Model No.	B H12	d1	g	d3 H7	d6 -0.1	d7	L1 -0.3	L5 -0.3	L6 -0.4	L7 -0.4
DIN 40	16.1	44.45	M16	17	63.55	56.25	68.4	18.5	22.8	25

DIN 40 STUD

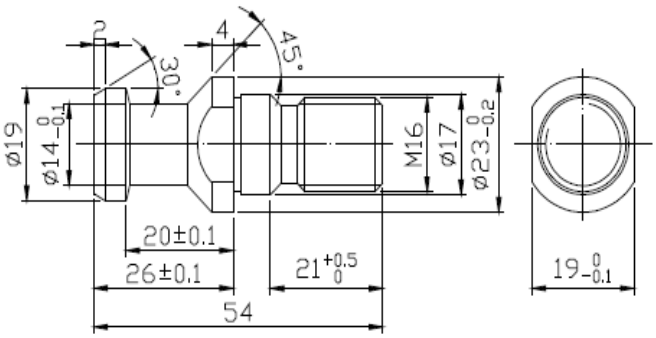

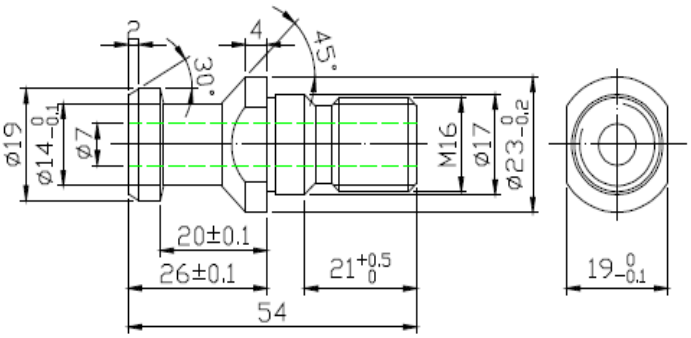

Cooling though spindle

9. Tool CHANGES

A. THE T FUNCTION IS USED TO COMMAND THE NUMBER OF TOOLS TO BE CHANGED.

B. THE DESIRED TOOL CAN BE DIRECTLY COMMENDED WITH ADDRESS T FOLLOWED BY 2-DIGIT NUMERIC VALUE. TOOL FUNCTION IS AVAILABLE WITHIN A RANGE FROM T01 TO T20.24.32.40,

EXAMPLE :

C. WHEN SPINDLE TOOL IS CHANGED TO N0. 2 TOOL, PROGRAM AS FOLLOW :

T02 (EOB)
M06 (EOB)

- NOW TOOL NO.2 WILL BE CHANGED TO SPINDLE.
- NOTE THAT THE COMMAND SHOULD BE TWO BLOCKS.

D. WHEN SPINDLE TOOL IS CHANGED TO NO.2 TOOL AND CALL TOOL NO.3 AS THE PREPARED TOOL.

T02 (E0B)
M06 T03 (E0B)

- NOW TOOL NO.2 WILL BE CHANGED TO SPINDLE AND TOOL NO.3 WILL BE ROTATED TO STANDBY POSITION.

10. CUTTING FLUID SUPPLY

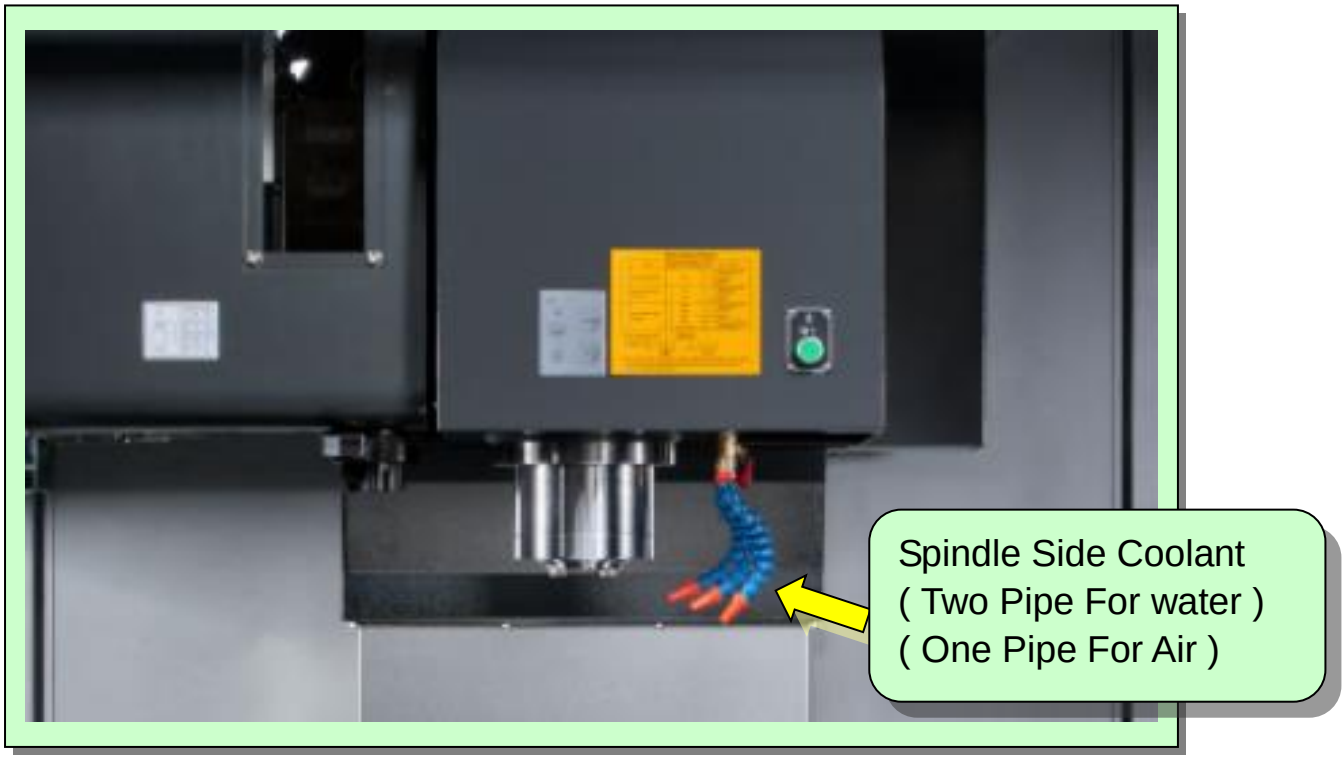

10.1 CUTTING FLUID SUPPLY UNIT FOR SPINDLE

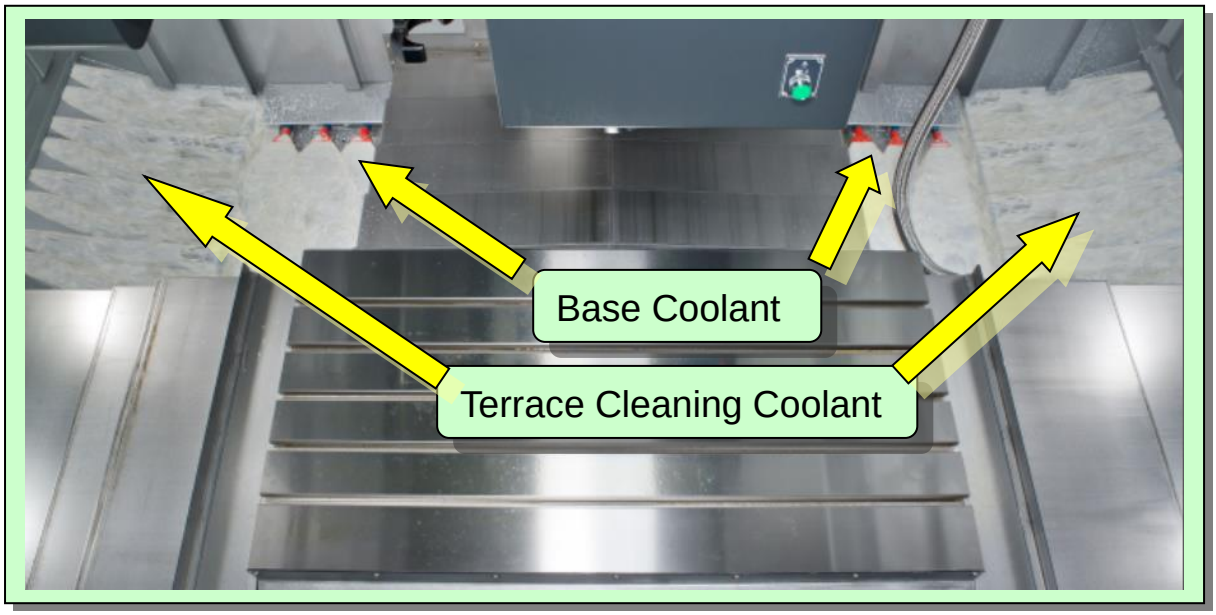

10.2 CUTTING FLUID SUPPLY UNIT FOR BASE

Table 10.1 CUTTING FLUID SUPPLY UNIT OPERATION CHART

Unit	Setting Method	
	Main Operation Panel	M-Code
Spindle Side Coolant		M08 (Start) M09 (Stop) M13 (SPINDLE CW / COOLANT PUMP ON) M14 (SPINDLE CW / COOLANT PUMP OFF)
Base Coolant (Terrace Cleaning Coolant)		M15 (Start) M16 (Stop) M13 (SPINDLE CW / COOLANT PUMP ON) M14 (SPINDLE CW / COOLANT PUMP OFF)
Through- Spindle Coolant		M48 (Start) M09 (Stop)

11. CHIP DISPOSAL

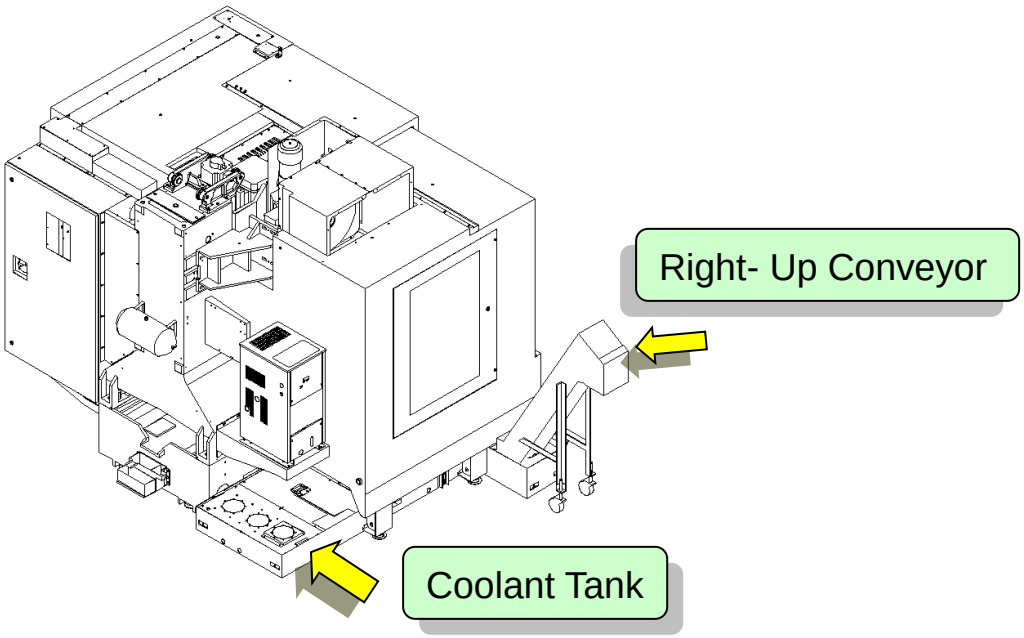

Figure 11.1 LIFT- UP CONVEYOR

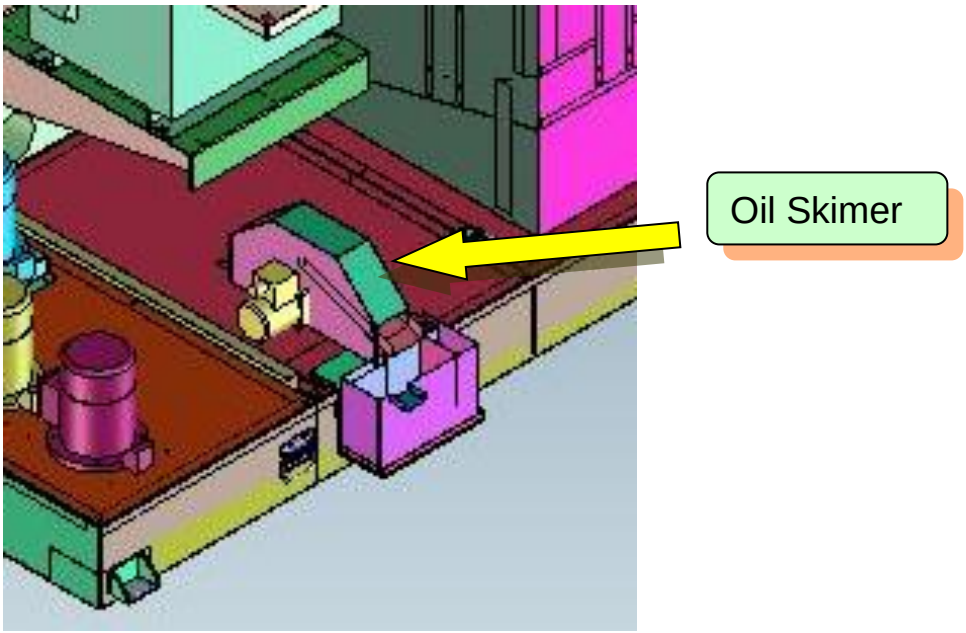

Figure 11.2 OIL SKIMER & OIL LEVEL INDICAOR

11.1 OPERATION OF LIFT-UP CONVEYOR

A. Automatic Operation

Conveyor forward operation is performed in connection with the cutting fluid discharge start command .

B. Manual Operation

1) Forward Manual Operation

a. Press the "CW" button as below, the conveyor rotation in forward direction .

b. Press the "CW" button again, the conveyor be stop .

2) Reverse Manual Operation

a. Keep pressing the "CCW " button as below, the conveyor rotation in reverse direction .

b. Release the "CCW "button , the conveyor be stop .

12. AUTOMATIC OPERATION

1. Program Edit Procedure

CNC machining is a cutting process with a program to control the tool movement. Therefore, the first work is to transfer tool path and other machining conditions as a program.

At first, edit a program according to the machining diagram of the work piece. Then, input the program into the CNC controller. By test running the program and confirming it correct, the machining can be executed.

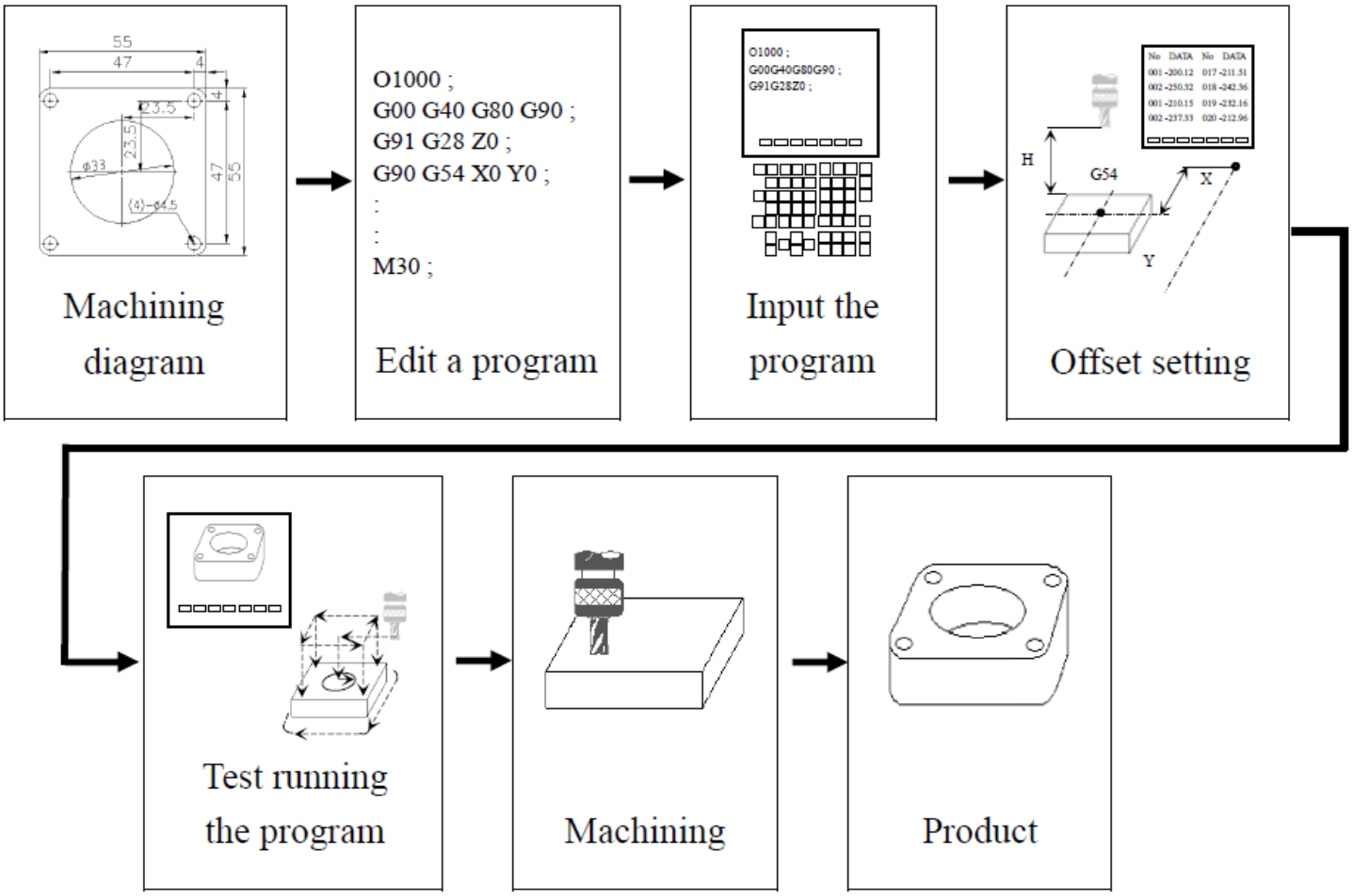

Factors have to be considered before editing a program：

1. Realize major dimensions in the diagram.
   Realize datum planes, the relative dimensions with tolerance and machining process.
2. cutting tools and cutting conditions.
   Choose proper tools by considering the material of work piece. Then, choose cutting conditions for each tools.
3. Manners for fixing the work piece.
   Choose a proper fixing manner and the fixture. Then, consider the position relation among the tool, fixture and the machine when the workpiece is fixed wheather there is any problem due to interference or cutting incapable.

2. Program Configuration

A program is divide as a main program and subprograms. The controller works by following commands in the program. When the main program calls a subprogram, the controller will follow the command to enter the subprogram.

Program Configuration

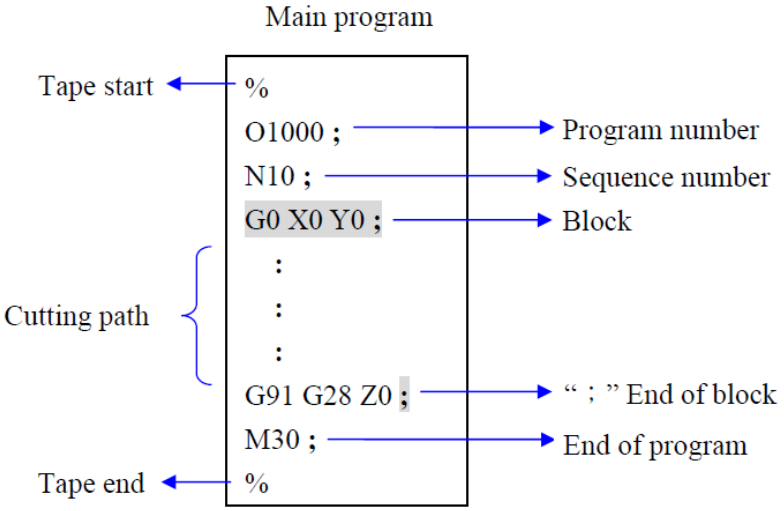

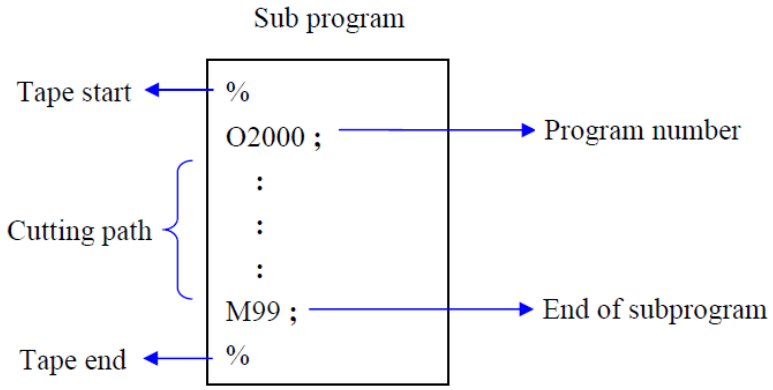

1. Tape start

   The symbol indicates the start of a program file.

2. Program number

   A program number consists of the address O followed by a four–digit number. In ISO code, the colon (:) can also be used as the address O. Program numbers 9000 to 9999 are usually used by machine tool builders.

Parameter

No.	Meaning
3201#3	When address O of a program number is output in ISO code 0 : " : " is output. 1 : " O " is output.

3. Sequence number

(1) Arrange blocks in order for easy searching.

(2) Arrange process sequences.

(3) Call the block for program re-start.

(4) Call the sequence NO. in program with the command M99.

N XXXX → Sequence No. (4 digits maximum)

4. Block

A block contains one or several commands.

Command = Address + Number

M 14

5. End of block

By pressing the key of END OF BLOCK [EOB], the symbol " ; " is displayed on the screen.

6. End of program

M02 : End a program and the cursor " __ " stays at this block.

M30 : End a program and the cursor " __ " returns the begining of the program.

M99 : Return the main program from the subprogram.

Parameter

No.	Meaning
3404#5	When M02 is specified in memory operation 0：the head of the program is automatically searched for. 1：the head of the program is not searched for.

7. Tape end

The symbol indicates the end of a program file.

3. Subprogram Call

If there is the same path for repeating, the program can be simplified with a sub-program.

Format：

M98 PXXXX □□□□ ;

- □□□□ → The called subprogram no. (4 digits)
- XXXX → Repeat time (4 digits)

M99 ; → End the subprogram and return the main program.

or

M98 P□□□□ LXXXX ;

- LXXXX → Repeat time (4 digits)
- P□□□□ → The called subprogram no. (4 digits)

M99 ; → End the subprogram and return the main program.

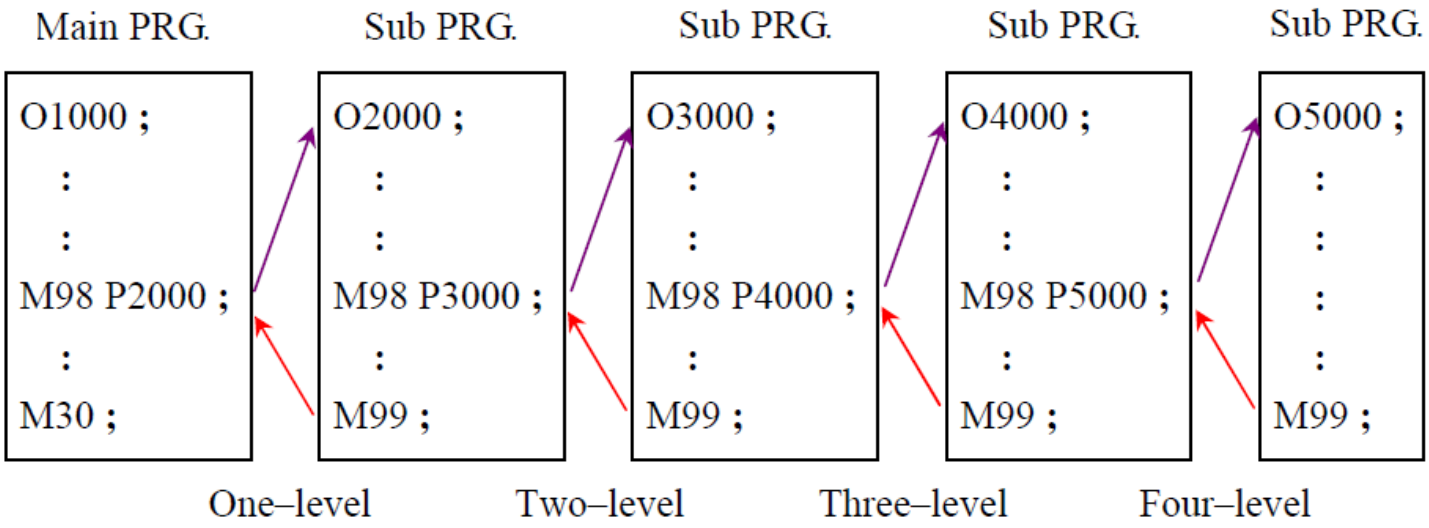

(1) When the repeat time is omitted, it is supposed to be 1.

(2) The most levels for calling subprograms are 4 levels.

(3) If the subprogram NO. cannot be found, the alarm No. 78 occurs.

4. Major Functions And Address

Address	Meaning
O	Program number
N	Sequence number
G	Specifies a motion mode (linear, arc, etc.)
X, Y, Z U, V, W A, B, C	Coordinate axis
I, J, K	Coordinate of the arc center
R	Arc radius
F	F Function (Feedrate)
S	S Function (Spindle speed)
T	T Function
M	M Function
H, D	Offset number
P, X	Dwell time
P	Subprogram No. called
L	Repeat time of a called subprogram
N	Sequence no. in program
P, Q, R	Canned cycle parameter

5. Force Mirror Image

The cutting path in the program can be done such as that in mirror for the specified axis. Please refer to the figure.

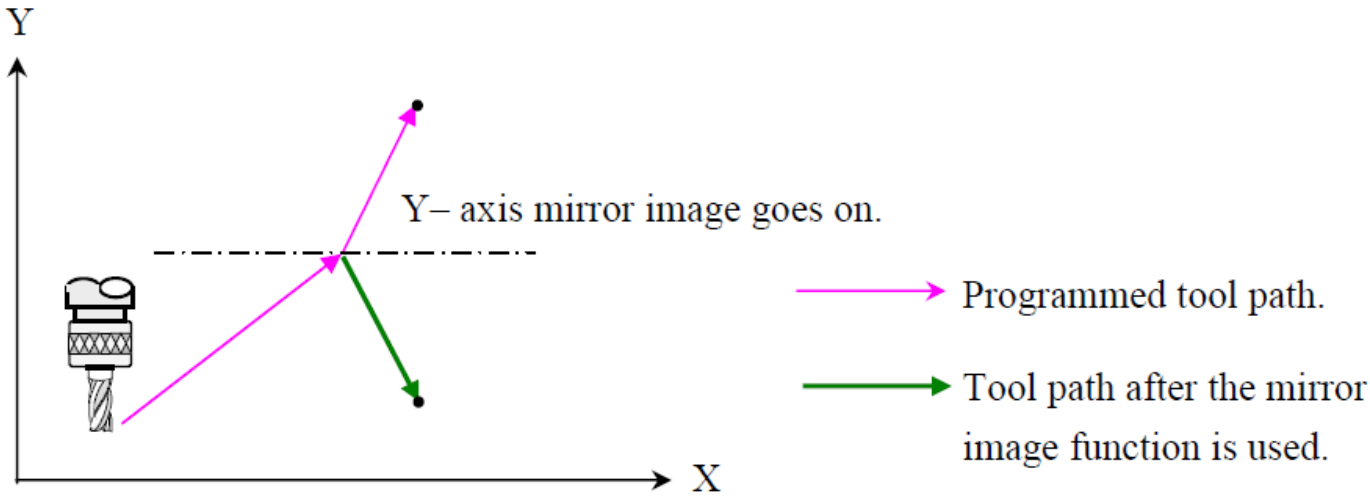

1. Under the MDI mode, press the function key [OFFSET SETTING].
2. Press the soft key [SETTING] , press page change keys [↑ PAGE] [PAGE ⇓].
3. Move the cursor to the mirror image axis by pressing cursor keys [↑] [↓].
4. Press the numeric key [1] and then the input key [INPUT], or press the soft key [(OPRT)] and then the soft key [ON : 1].

The mirror image function can also be turned on and off by parameter setting.

No.	Meaning
12 # 1	Mirror image for each axis is 0 : OFF 1 : ON

6. Program Edit

Program Number Search

1. Under the EDIT mode, press the function key PROG .
2. Enter a program number.
3. Press the menu key [O SRH].

Note : If there is no the called program number, the alarm No. 071 DATA NOT FOUND will occur.

7. ADD New Program

1. Under the EDIT mode, press the function key PROG .
2. Press the MDI key O (, then enter a program number.
3. Press the insert key INSERT .

Note : If the input new program no. is repeated to another existed program number, the alarm No. 073 PROGRAM NUMBER ALREADY IN USE will occur.

8. Deleting Programs

Procedure for removing the display disable attribute

1 Select MDI mode.
2 Set the same value as the password (parameter No. 3210 (PSW)) in parameter No. 3211 (KEY) to release protection of programs.
3 Select EDIT mode.
4 Press the function key PROG.
5 Press the soft key [FOLDER].
6 Press the soft key [(OPRT)].
7 Press the soft key [DETAIL ON].
8 Move the cursor to the program or folder from which you want to remove the display disable attribute.
9 Press the soft key [CHANGE ATTR].
10 Press the soft key [DISP ENABLE].
11 Press the soft key [END].

⚠ CAUTION

1 After completing editing, set the display disable attribute as necessary.
2 To set the display disable attribute, perform steps 1 to 9 of the procedure for removing the attribute and press soft key [DISP DISABL] in step 10. Then, set parameter No. 3210 (PSW) to a value other than 0 that is not the value set in parameter No. 3211 (KEY). The program or folder is not displayed in any list screen.

9. Program Commanded Search

When searching the position of a command, move the curser keys or use the manner of searching shown below .

Operation of moving cursors：

1. Pressing the cursor key [→], the cursor moves forward word by word on the screen.
2. Pressing the cursor key [←], the cursor moves backward word by word on the screen.
3. Pressing the cursor key [↑], the first word of the previous block is searched.
4. Pressing the cursor key [↓], the first word of the next block is searched.
5. Press the page change key [↑ PAGE] to display the previous page and search for the first word of this page.
6. Press the page change key [PAGE ↓] to display the next page and search for the first word of this page.

Operating of searching manner：

1. Under the MDI mode, enter the command to be searched.
2. Press the soft key [SRH ↓] to search forward or press the soft key [SRH ↑] to search backward.

   Example：Searching for M06

   (1) Press the MDI key [M#] [0] [6→].

   (2) Press the soft key [SRH ↓].

Note：(1) The 0 in the entered command cannot be omitted. For example, when searching the M09, never enter M9.

(2) The command must be entered completely.
For example, when searching the F180, never enter such as F1 or F18.

(3) If there is no position found out for the entered command, the alarm No. 071 DATA NOT FOUND will occur.

10. Edit Key

Inserting a Word

1. Under the MDI mode, enter " the command to be inserted ".

2. Press the insert key [INSERT]. The entered command will be inserted at the position after the cursor.

Example：Insert M08 after F5000.

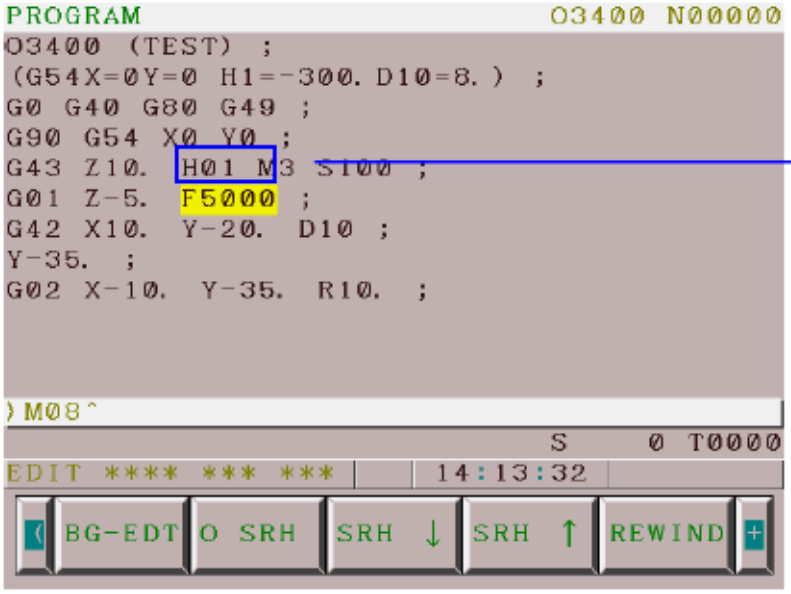

The current position of the cursor.

(1) Press the MDI key [M#] [0] [8↑].

(2) Press the insert key [INSERT].

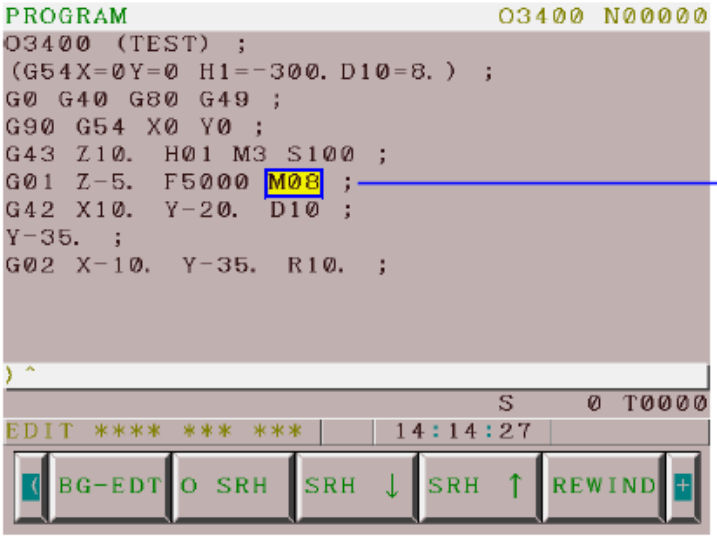

The position of the inserted command.

Altering a Word

1. Under the MDI mode, enter the command to be altered.

2. Press the alter key [ALTER]. The entered command will alter the original command at the position of the cursor.

Example：Change M08 to M12.

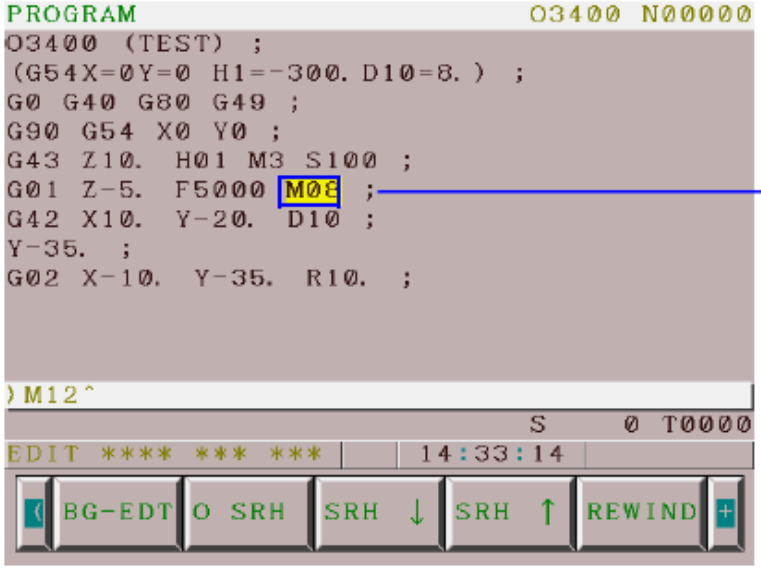

The command to be altered.

(1) Press the MDI key [M#] [1] [2]

(2) Press the alter key [ALTER].

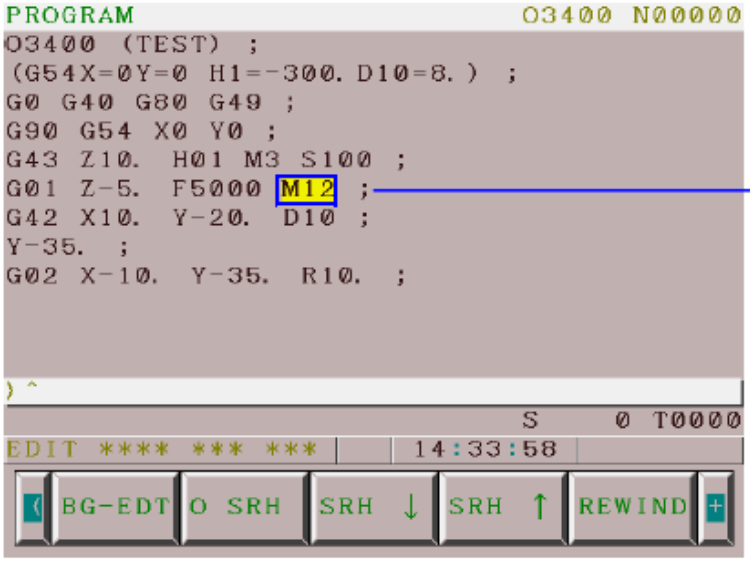

The command after altering.

Deleting a Word

A. Deleting a command：

1. Move the cursor to the command to be deleted.

2. Press the delete key DELETE to delete that command immediately.

Example：Delete M08.

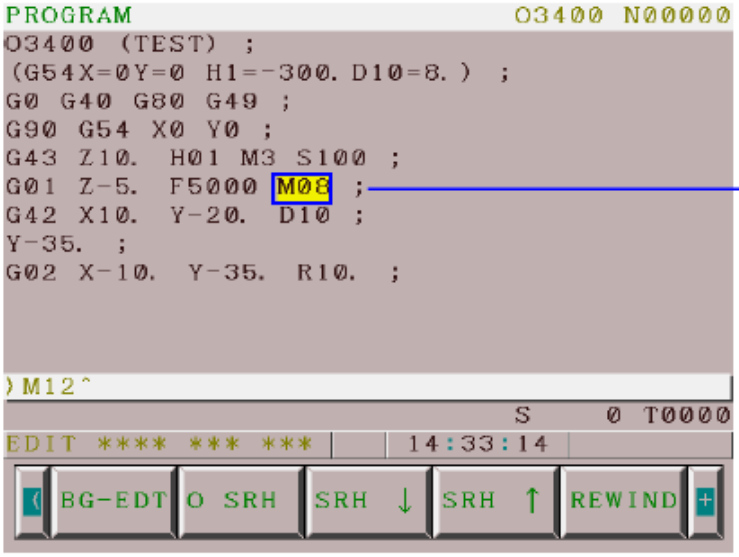

The command to be deleted.

Press the delete key DELETE

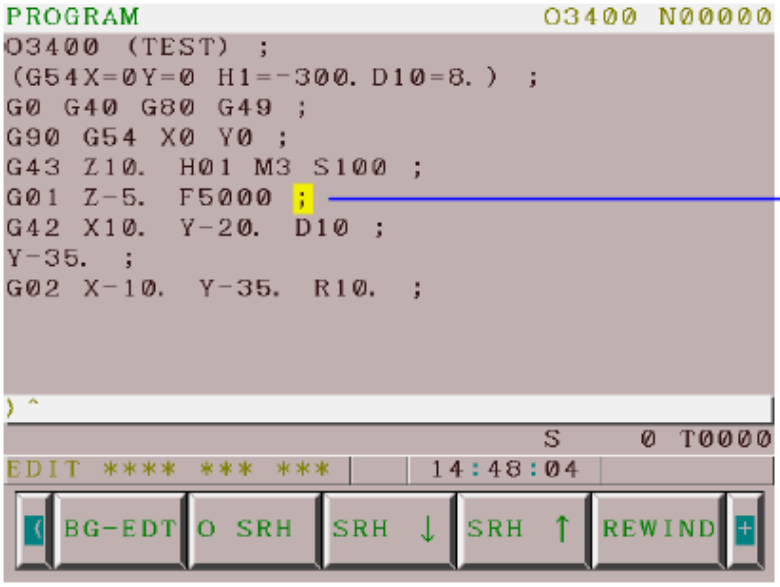

The indicated command is deleted.

B. Deleting a block

1. When a block will be deleted, move the cursor to the beginning of this block.

2. Press the end of block key [EOB].

3. Press the delete key [DELETE], that command is deleted immediately.

Example：Delete the block of G03 X120. Y100. R10. ；

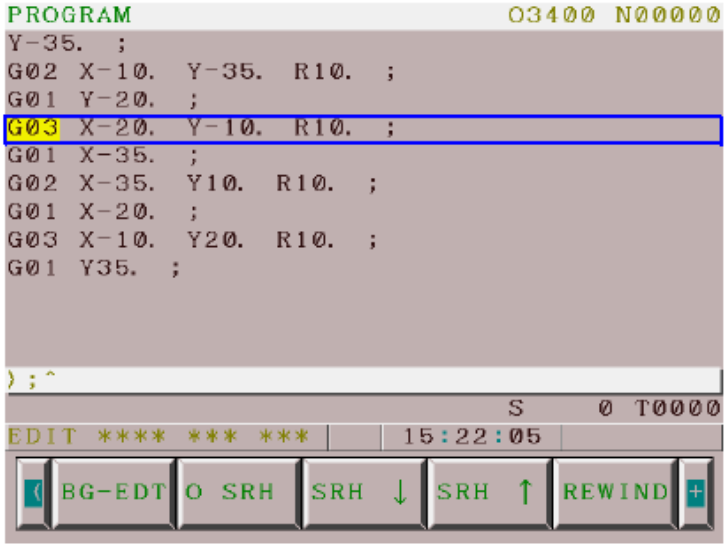

The block to be deleted.

(1) Press the end of block key [EOB].

(2) Press the delete key [DELETE] to delete that command immediately.

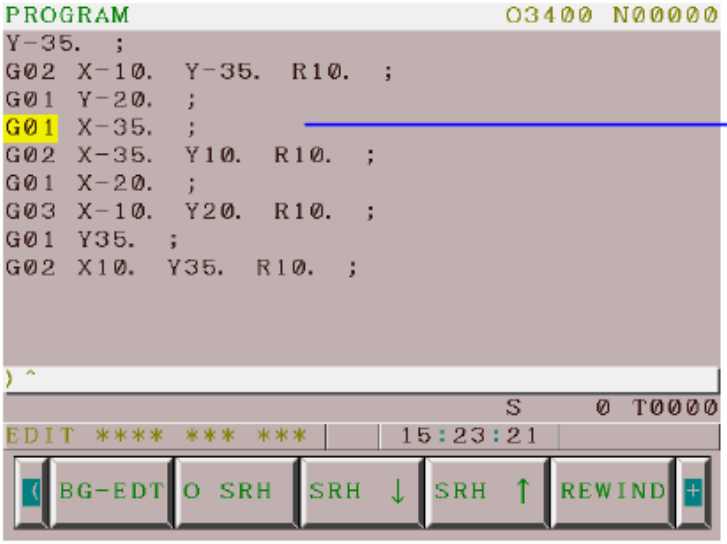

The indicated block is deleted.

C. Deleting multiple blocks：

1. When several continuous blocks will be deleted, move the cursor to the beginning of the first block.
2. Press the MDI key [N] , Enter the block number of thelast block.
3. Press the delete key [DELETE] to delete those blocks.

Example：Deleting blocks from N10 to N20.

```
PROGRAM                                  O0001 N00010
G90 G54 X0 Y0 ;
N10 (12 D12) ;
G43 Z30.  H1 S1200 M3 ;
G1 Z-25.  F100.  M08 ;
G0 Z10.  ;
N20 ;
G0 X60.132 Y0 ;
G01 Z-10.  ;
X73.036 Y-2.707 ;
)N20^
                                   S      0 T0000
EDIT **** *** ***        16:34:06
[(] BG-EDT | O SRH | SRH ↓ | SRH ↑ | REWIND [+]
```

These blocks to be deleted.

(1) Press the MDI key [N] [2↓] [0] .

(2) Press the delete key [DELETE] to delete those blocks.

```
PROGRAM                                  O0001 N00000
G90 G54 X0 Y0 ;
G0 X60.132 Y0 ;
G01 Z-10.  ;
X73.036 Y-2.707 ;
G2 X14.569 Y-19.524 I-43.737 J11.406
F300.  ;
G3 X5.402 Y-26.496 I33.565 J-53.644 ;
G2 X-5.402 Y-26.496 I-5.402 J5.9 ;
G3 X-14.569 Y-19.524 I-42.732 J-46.672 ;
)^
                                   S      0 T0000
EDIT **** *** ***        16:37:35
[(] BG-EDT | O SRH | SRH ↓ | SRH ↑ | REWIND [+]
```

The indicated blocks are deleted.

11. Copy Program

Copying an Entire Program

Copy a program as a new program with the same contents.

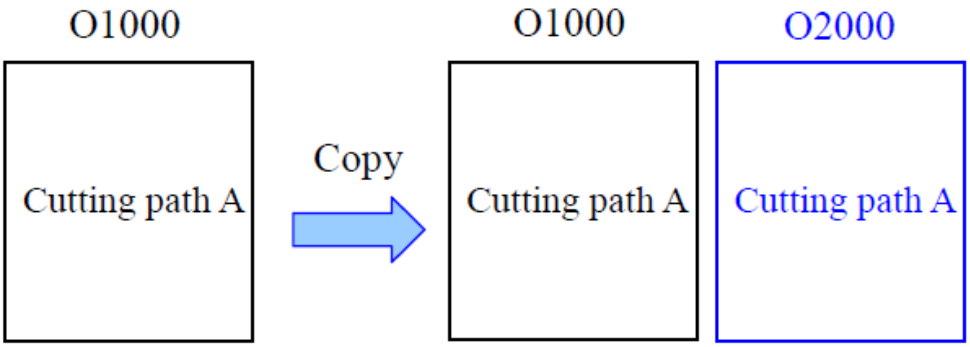

1. Under the EDIT mode, press the function key [PROG].
2. Press the soft key [(OPRT)].
3. Press the rightmost soft key [▷] (continuous menu key).
4. Press the soft key [EX-EDT].
5. Press the soft key [COPY].
6. Press the soft key [ALL].
7. Enter a new program number (without address " O ").

   Without specifying a new program number, the program number O0000 is entered automatically.
8. Press the input key [INPUT].
9. Press the soft key [EXEC]

Copying Part of a Program

Copy part of a program to create a new program.

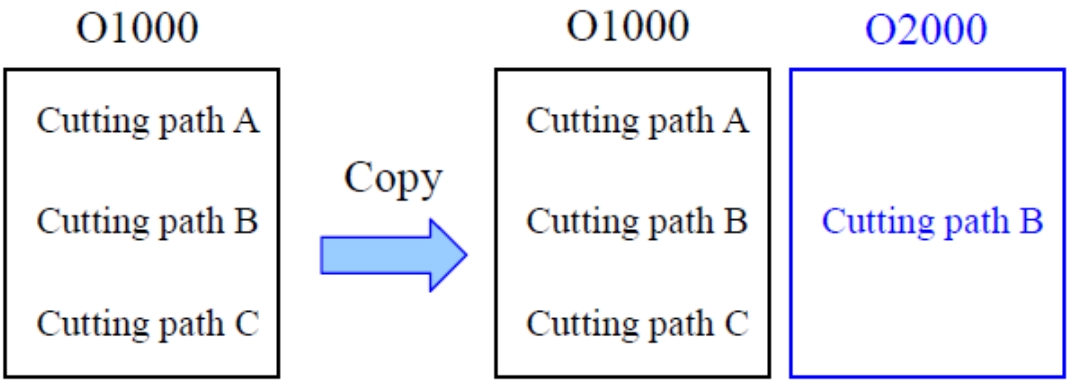

1. Under the EDIT mode, press the function key PROG .
2. Press the soft key [(OPRT)].
3. Press the rightmost soft key ▷ (continuous menu key).
4. Press the soft key [EX-EDT].
5. Press the soft key [COPY].
6. Move the cursor to the start of the range to be copied and press the soft key [CRSL ~].
7. Move the cursor to the end of the range to be copied and press the soft key [~ CRSL].

   Or, Press the soft key [~ BTTM] if the copied range is to the end of the program.
8. Enter a new program number (without address " O ").

   Without specifying a new program number, the program number O0000 is entered automatically.
9. Press the input key INPUT
10. Press the soft key [EXEC].
11. Enter other blocks to complete the new program.

Moving Part of a Program

Move part of a program to create a new program and this part is deleted from the original program.

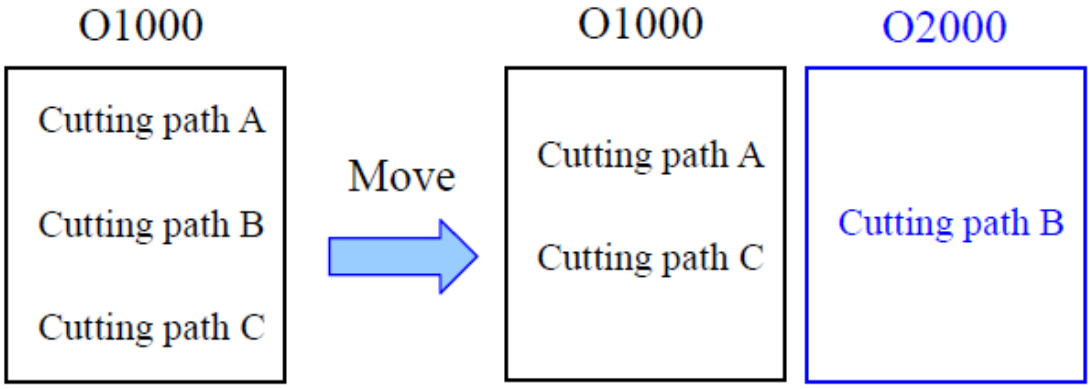

1. Under the EDIT mode, press the function key [PROG].
2. Press the soft key [(OPRT)].
3. Press the the rightmost soft key [▷] (continuous menu key).
4. Press the soft key [EX-EDT].
5. Press the soft key [MOVE].
6. Move the cursor to the beginning of the range to be moved and press the soft key [CRSL ~].
7. Move the cursor to the end of the range to be moved and press the soft key [~ CRSL].

   Or, Press the soft key [~ BTTM] if the moved range is to the end of the program.

8. Enter a new program number (without address " O ").

   Without specifying a new program number, the program number O0000 is entered automatically.

9. Press the input key [INPUT].

10. Press the soft key [EXEC].

11. Enter other blocks to complete the new program.

Merging a Program

Copy another program and insert it into the current program at a arbitrary position.

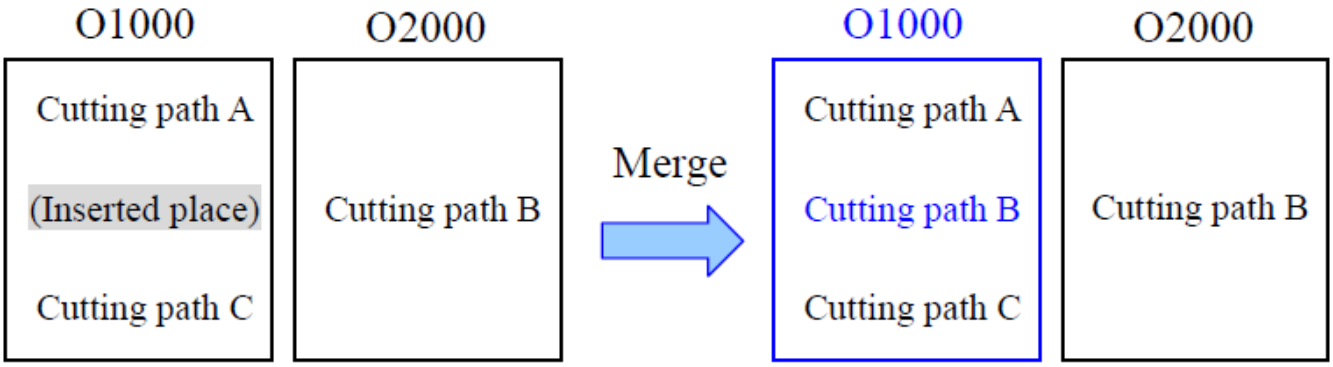

1. Under the EDIT mode, press the function key [PROG].

2. Press the soft key [(OPRT)].

3. Press the rightmost soft key [▷] (continuous menu key).

4. Press the soft key [EX-EDT].

5. Press the soft key [MERGE].

6. Move the cursor to the position where will be inserted with another program and press the soft key [~ CRSL].

   Or, Press the soft key [~ BTTM] for being inserted at the end of the program.

7. Enter the program number (without address " O ") which will be copied.
8. Press the input key [INPUT].
9. Press the soft key [EXEC].
10. Modify the inserted part to correct program.

Replacement Of Words And Address

Replace specified words or addresses in the program.

1. Under the EDIT mode, press the function key [PROG].
2. Press the soft key [(OPRT)].
3. Press the rightmost soft key [▷] (continuous menu key).
4. Press the soft key [EX-EDT].
5. Press the soft key [CHANGE].
6. Enter the words or addresses. (Up to 15 characters can be specified for words.)
7. Press the soft key [BEFORE].
8. Enter the new words or addresses. (Up to 15 characters can be specified for words.)
9. Press the soft key [AFTER].

   The cursor is moved to the first place and ready for replacement.
10. Press the soft key [EXEC] to replace all the specified words or addresses.

    Or, press the soft key [EX- SGL] once to do single replacement at the place with cursor and search for the next place. Repeat pressing this soft key to continue the other replacement.

    Or, press the soft key [SKIP] for no replacement at the searched place with cursor and doing the next search for continuing the next replacement.

Example：Replace all Z-12. with Z-14.

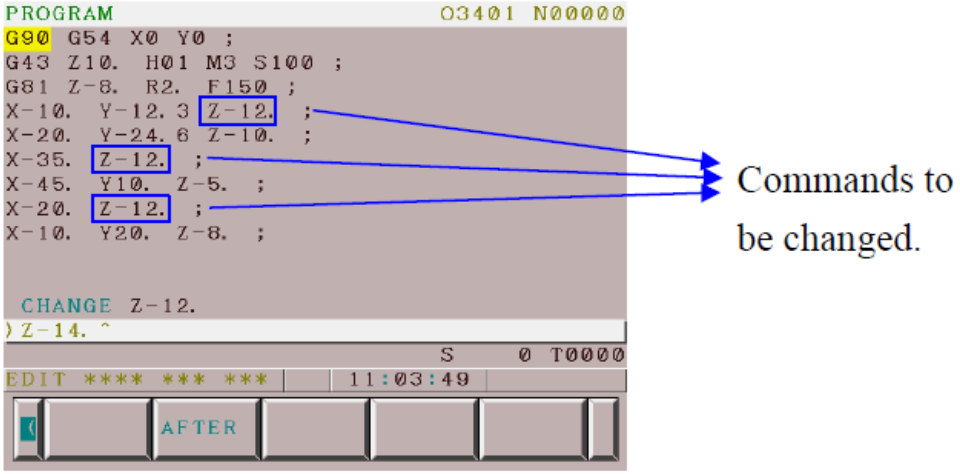

(1) Press the MDI keys [Z w] [–] [1] [2] [.] .

(2) Press the soft key [BEFORE].

(3) Press the MDI keys [Z w] [–] [1] [4] [.] .

(4) Press the soft key [AFTER].

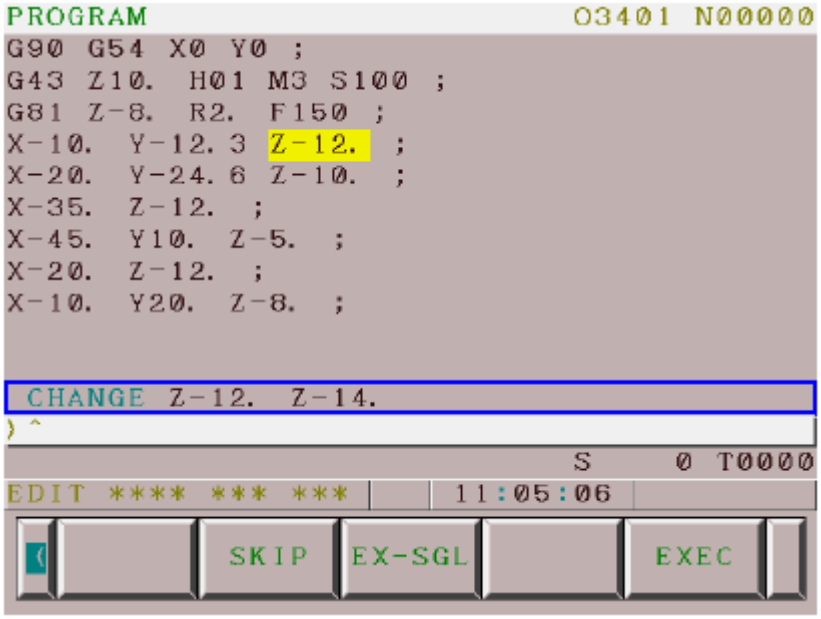

(5) Press the soft key [EXEC].

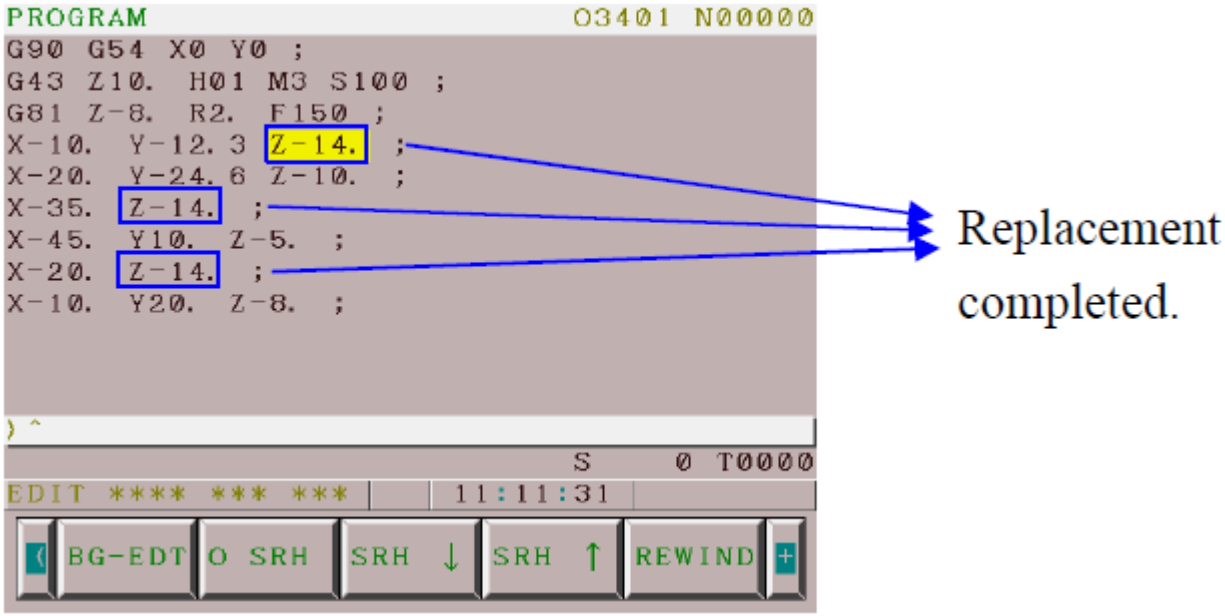

Note：The command must be entered completely.

12. GRAPHICS FUNCTION

Graphic Display

The graphic display functions enable drawing of the tool path of the program currently used for machining.

These functions are intended to display the movement of the tool during automatic operation or during manual operation.

This enables the operator to check the progress of machining and the current tool position.

These functions include the following:

- The current tool position in the workpiece coordinate system is displayed.
- Graphic coordinates can be set freely.
- Rapid traverse and cutting feed can be drawn using a different color for each.
- The values of F, S, and T in the program during drawing are displayed.
- Graphic enlargement or reduction is possible.

NOTE

When bit 3 (NGR) of parameter No.8134 is 0, this function can be used.

Graphic display procedure

Explanation

Press the function key then press the [GRAPH] soft key to display the tool path graphic screen.

- Tool path graphic screen

The tool path graphic screen consists of three major areas:

- Graphic area for drawing a tool path
- Area for displaying machining information such as tool position information
- Area for displaying a graphic coordinate system

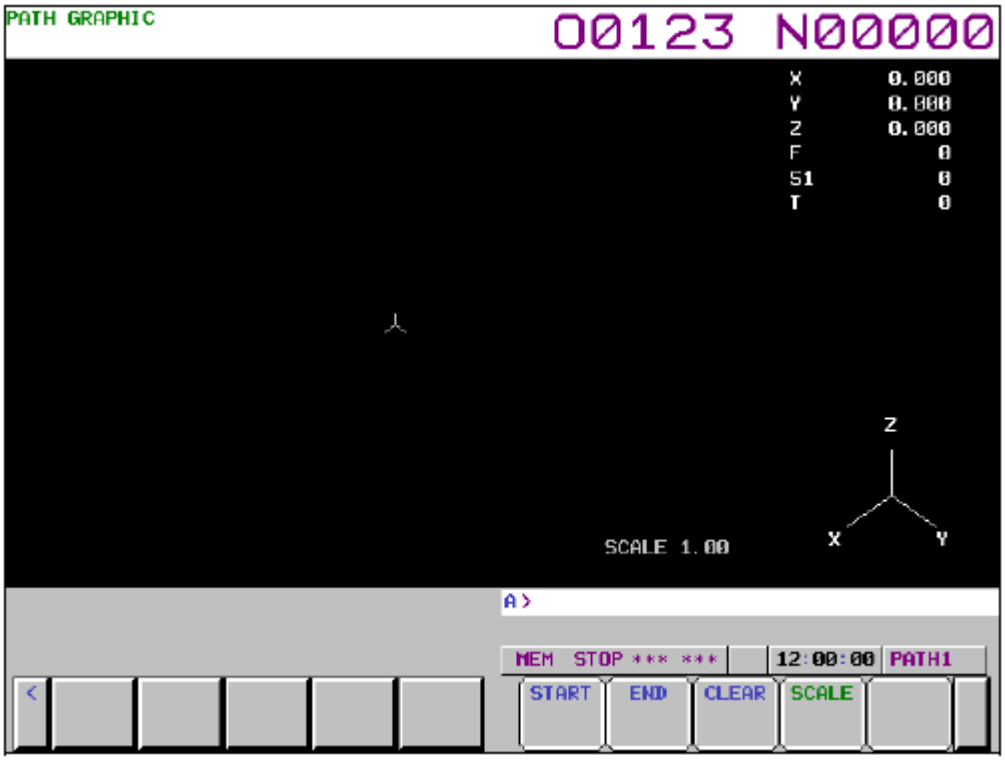

Tool path graphic screen

- Tool path

In a graphic coordinate system set by the graphic parameters described later, a tool path in the workpiece coordinate system is drawn.
Even when the tool position changes discontinuously for a cause such as the setting of the origin and the switching of the workpiece coordinate system, drawing is performed assuming that the tool has moved.
A tool path is continuously drawn even when the screen display is changed to another screen.

- Machining information

On the right side of the screen, the positions (along only three axes used for drawing) in the workpiece coordinate system, feedrate (F), spindle speed (S), and tool number (T) are displayed.

Graphic parameter screen

Explanation

Press the function key then press the [PARAM] soft key to display the tool path graphic screen.

On the graphic parameter screen, make settings necessary for drawing a tool path.
The graphic parameter screen consists of three pages.

- Graphic parameter screen page 1

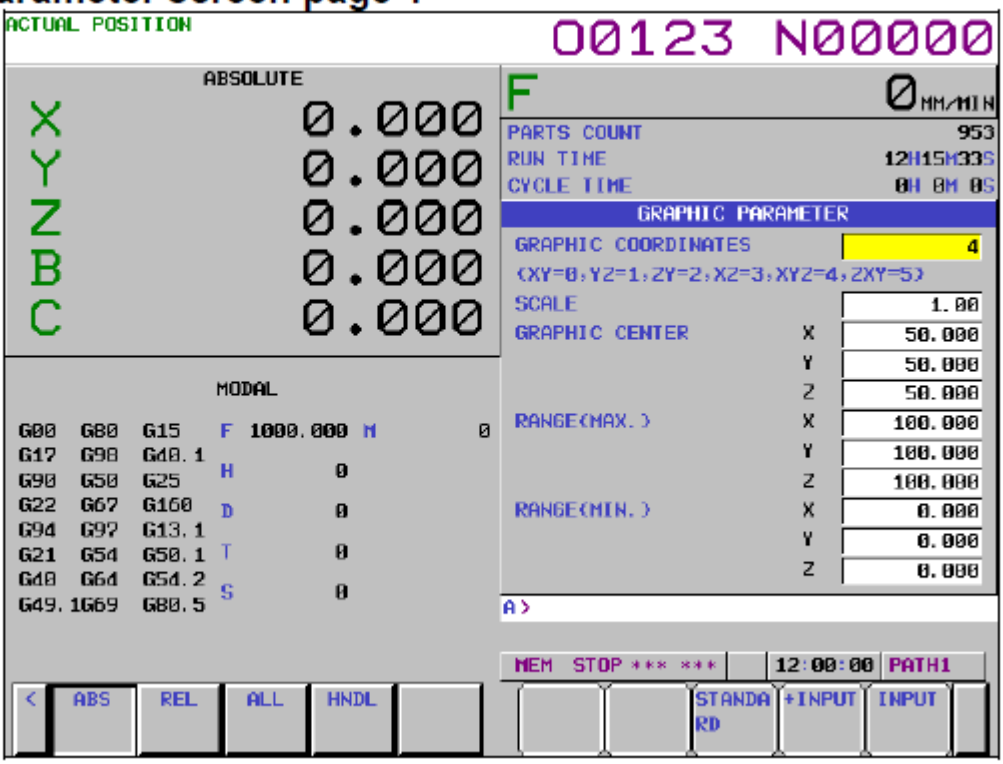

Graphic parameter screen page 1

On graphic parameter screen page 1, a graphic coordinate system, graphic range, and so forth are set.
In the setting of a graphic coordinate system, the coordinate axes and axis names of the set coordinate system are graphically displayed. When a 3-dimensional coordinate system is displayed, a rotation angle is also displayed.
A graphic range is set using one of two methods. One method sets a graphic scale and graphic center coordinates. The other sets the maximum values and minimum values of a graphic range.

- **Graphic parameter screen page 2**

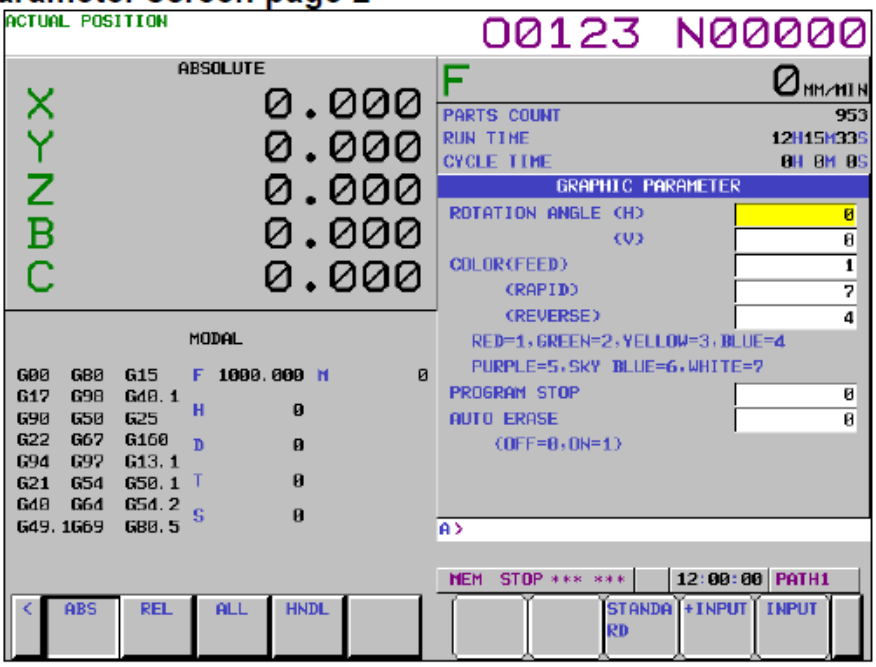

Graphic parameter screen page 2

On graphic parameter screen page 2, graphic colors, rotation angles, and whether to perform automatic erase operation are set.

- **Graphic parameter screen page 3**

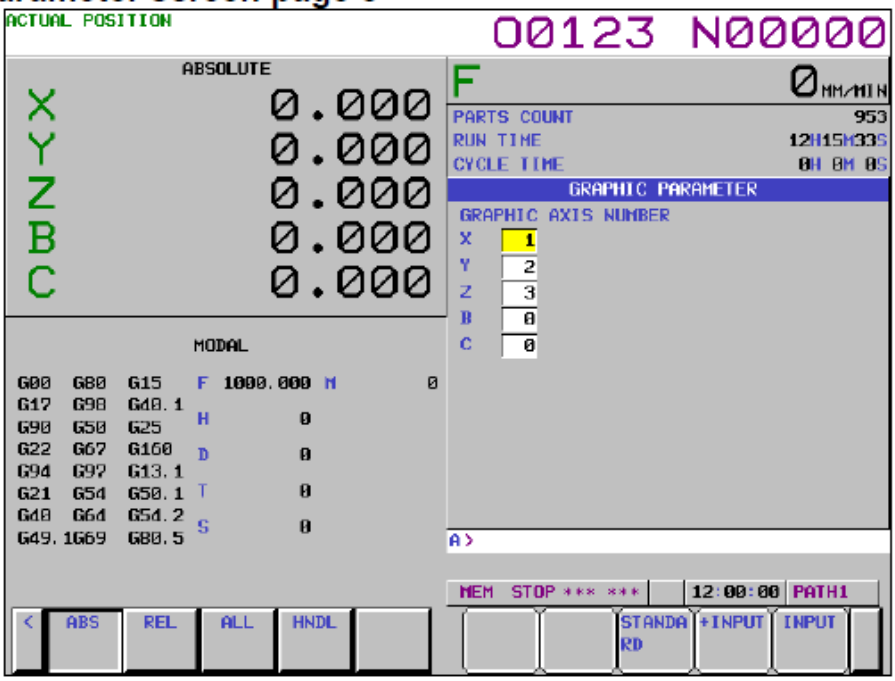

Graphic parameter screen page 3

On graphic parameter screen page 3, coordinate axes to be used for drawing are set.

Explanation

For tool path drawing, a graphic coordinate system, tool path graphic colors, and graphic range need to be set on the graphic parameter screen.
The graphic parameters to be set on the graphic parameter screen are described below.
When a value is set for a parameter, the parameter value becomes immediately effective. If a tool path is already drawn, the tool path is cleared when new parameter values are set.

- Graphic coordinate system

Select a desired graphic coordinate system for tool path drawing then set the corresponding number.

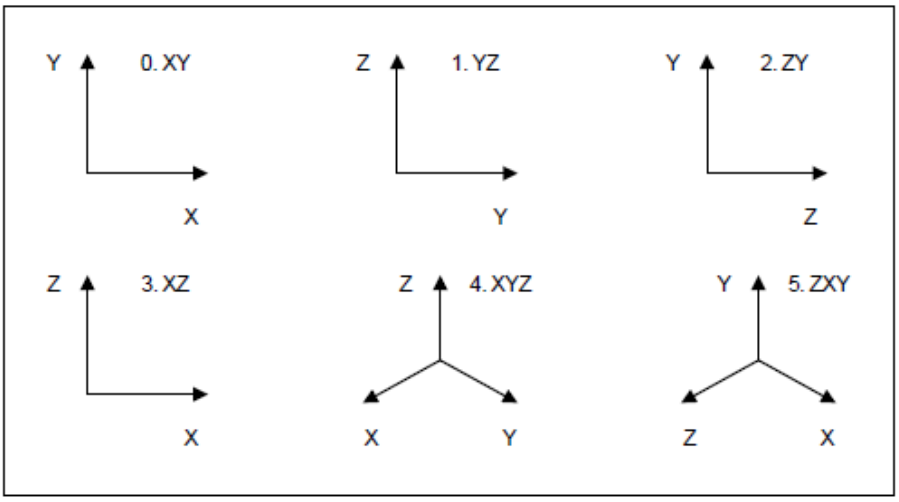

Graphic coordinate system (M series)

Chapter 4

PROGRAMMING

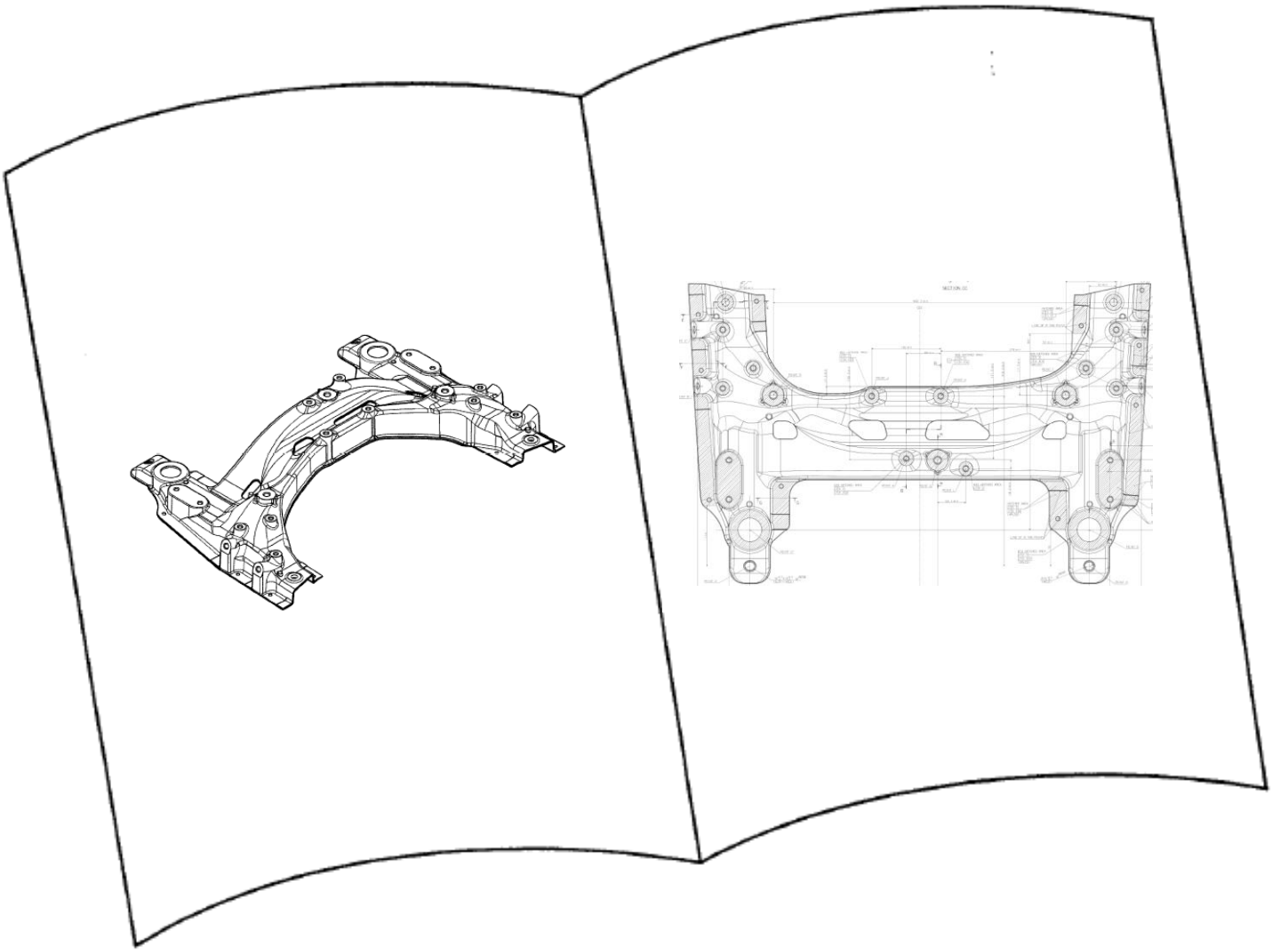

1. Description About All Functions

1.1 G Function

G functions are also called as preparation functions. They are designed completely inside the controller. Different G codes give different meaning and action.

G codes are divided into two types as follows：

1. One – shot G code
   Such a G code is effective only in the block in which it is specified.
   It is ineffective in other blocks.
   Example：G04, G09, G28, etc.

2. Modal G code
   Such a G code is effective until another G code of the same group is specified.
   (Please refer to the G code list for groups of G codes)

Example：

```
G00 Z30. ;
  :                 } G00 is effective in this range.
X20. Y20. ;
G01 Z-5. F200 ;  ──→  G01 replaces G00.
```

Note：(1) In the G code list, the group 00 are those of one-shot G codes. The other groups are all of modal G codes.
(2) If different G codes of the same group are used in a block simultaneously, the last one is the effective one.
Example：G00 G01 X__ Y__ ;

Explain

1. When the clear state (parameter CLR (No. 3402#6)) is set at power-up or reset, the modal G codes are placed in the states described below.
   (1) The modal G codes are placed in the states marked with ◤ as indicated in Table 2.
   (2) G20 and G21 remain unchanged when the clear state is set at power-up or reset.
   (3) Which status G22 or G23 at power on is set by parameter G23 (No. 3402#7). However, G22 and G23 remain unchanged when the clear state is set at reset.
   (4) The user can select G00 or G01 by setting parameter G01 (No. 3402#0).
   (5) The user can select G90 or G91 by setting parameter G91 (No. 3402#3).
   When G code system B or C is used in the lathe system, setting parameter G91 (No. 3402#3) determines which code, either G90 or G91, is effective.
   (6) In the machining center system, the user can select G17, G18, or G19 by setting parameters G18 and G19 (No. 3402#1 and #2).

2. G codes in group 00 other than G10 and G11 are one-shot G codes.
3. When a G code not listed in the G code list is specified, or a G code that has no corresponding option is specified, alarm PS0010 occurs.
4. Multiple G codes can be specified in the same block if each G code belongs to a different group. If multiple G codes that belong to the same group are specified in the same block, only the last G code specified is valid.
5. If a G code belonging to group 01 is specified in a canned cycle for drilling, the canned cycle for drilling is cancelled. This means that the same state set by specifying G80 is set. Note that the G codes in group 01 are not affected by a G code specifying a canned cycle for drilling.
6. G codes are indicated by group.
7. The group of G60 is switched according to the setting of the parameter MDL (No. 5431#0). (When the MDL bit is set to 0, the 00 group is selected. When the MDL bit is set to 1, the 01 group is selected.)

Table 1.1 G Code List

G code	Group	Function	
G00	01	Positioning (rapid traverse)	
G01		Linear interpolation (cutting feed)	
G02		Circular interpolation CW or helical interpolation CW	
G03		Circular interpolation CCW or helical interpolation CCW	
G04	00	Dwell	
G04.1		G code preventing buffering	
G05.1		AI Advanced Preview Control / AI contour control / Nano smoothing	
G05.4		HRV3 on/off	
G07.1 (G107)		Cylindrical interpolation	
G08		AI Advanced Preview Control / AI contour control (advanced preview control compatible command)	
G09		Exact stop	
G10		Programmable data input	
G10.6		Tool retract and recover	
G11		Programmable data input mode cancel	
G15	17	Polar coordinates command cancel	
G16		Polar coordinates command	
G17	02	XpYp plane selection	Xp: X axis or its parallel axis
G18		ZpXp plane selection	Yp: Y axis or its parallel axis
G19		YpZp plane selection	Zp: Z axis or its parallel axis
G20 (G70)	06	Input in inch	
G21 (G71)		Input in mm	
G22	04	Stored stroke check function on	
G23		Stored stroke check function off	
G27	00	Reference position return check	
G28		Automatic return to reference position	
G28.2		In-position check disable reference position return	
G29		Movement from reference position	
G30		2nd, 3rd and 4th reference position return	
G30.2		In-position check disable 2nd, 3rd, or 4th reference position return	
G31		Skip function	
G31.8		EGB-axis skip	
G33	01	Threading	
G37	00	Automatic tool length measurement	
G38		Tool radius/tool nose radius compensation : preserve vector	
G39		Tool radius/tool nose radius compensation : corner circular interpolation	
G40	07	Tool radius/tool nose radius compensation : cancel	
G41		Tool radius/tool nose radius compensation : left	
G42		Tool radius/tool nose radius compensation : right	
G40.1	18	Normal direction control cancel mode	
G41.1		Normal direction control on : left	
G42.1		Normal direction control on : right	
G43	08	Tool length compensation +	
G44		Tool length compensation -	
G43.7		Tool offset	

G code	Group	Function
G45	00	Tool offset : increase
G46		Tool offset : decrease
G47		Tool offset : double increase
G48		Tool offset : double decrease
G49 (G49.1)	08	Tool length compensation cancel
G50	11	Scaling cancel
G51		Scaling
G50.1	22	Programmable mirror image cancel
G51.1		Programmable mirror image
G50.4	00	Cancel synchronous control
G50.5		Cancel composite control
G50.6		Cancel superimposed control
G50.9		Auxiliary function output in moving axis
G51.4		Start synchronous control
G51.5		Start composite control
G51.6		Start superimposed control
G52		Local coordinate system setting
G53		Machine coordinate system setting
G53.1		Tool axis direction control
G53.6		Tool center point retention type tool axis direction control
G54 (G54.1)	14	Workpiece coordinate system 1 selection
G55		Workpiece coordinate system 2 selection
G56		Workpiece coordinate system 3 selection
G57		Workpiece coordinate system 4 selection
G58		Workpiece coordinate system 5 selection
G59		Workpiece coordinate system 6 selection
G60	00	Single direction positioning
G61	15	Exact stop mode
G62		Automatic corner override
G63		Tapping mode
G64		Cutting mode
G65	00	Macro call
G66	12	Macro modal call A
G66.1		Macro modal call B
G67		Macro modal call A/B cancel
G68	16	Coordinate system rotation start or 3-dimensional coordinate conversion mode on
G69		Coordinate system rotation cancel or 3-dimensional coordinate conversion mode off
G68.2		Tilted working plane indexing
G68.3		Tilted working plane indexing by tool axis direction
G68.4		Tilted working plane indexing (incremental multi-command)
G72.1	00	Figure copying (rotary copy)
G72.2		Figure copying (linear copy)
G73	09	Peck drilling cycle
G74		Left-handed tapping cycle
G75	01	Plunge grinding cycle
G76	09	Fine boring cycle
G77	01	Plunge direct sizing/grinding cycle
G78		Continuous-feed surface grinding cycle
G79		Intermittent-feed surface grinding cycle
G80	09	Canned cycle cancel Electronic gear box : synchronization cancellation
G80.4	34	Electronic gear box: synchronization cancellation
G81.4		Electronic gear box: synchronization start

G code	Group	Function
G81	09	Drilling cycle or spot boring cycle Electronic gear box : synchronization start
G81.1	00	High precision oscillation function
G82	09	Drilling cycle or counter boring cycle
G83		Peck drilling cycle
G84		Tapping cycle
G84.2		Rigid tapping cycle (FS10/11 format)
G84.3		Left-handed rigid tapping cycle (FS10/11 format)
G85		Boring cycle
G86		Boring cycle
G87		Back boring cycle
G88		Boring cycle
G89		Boring cycle
G90	03	Absolute programming
G91		Incremental programming
G91.1	00	Checking the maximum incremental amount specified
G92		Setting for workpiece coordinate system or clamp at maximum spindle speed
G92.1		Workpiece coordinate system preset
G93	05	Inverse time feed
G94		Feed per minute
G95		Feed per revolution
G96	13	Constant surface speed control
G97		Constant surface speed control cancel
G96.1	00	Spindle indexing execution (waiting for completion)
G96.2		Spindle indexing execution (not waiting for completion)
G96.3		Spindle indexing completion check
G96.4		SV speed control mode ON
G98	10	Canned cycle : return to initial level
G99		Canned cycle : return to R point level
G107	00	Cylindrical interpolation
G160	20	In-feed control cancel
G161		In-feed control

1.2 F Commanded

The F function is also called as feed function. It is used for speed control of tool movement.

Expression of the value following the F command：

Feed per minute	mm／min (Metric)
	inch／min (Inch)
Feed per rotation	mm／rev (Metric)
	inch／rev (Inch)

If a commanded value of F function is out of the setting range in the machine, the setting value will be the actual feedrate.

Having set the feedrate with F function, if it is not specified again, the previous feedrate is kept effective. For actual requirement in machining, the programmed feederate can be adjusted with the rotary switch FEEDRATE OVERRIDE % to get the adequate feedrate.

1.3 S Commanded

The S function is also called as spindle speed. Spindle speed is specified with the value following the S command. Its unit is rpm.

If a commanded value of S function is out of the setting range in the machine, the maximum or minimum setting value will be the actual speed.

For actual requirement in machining, the programmed spindle speed can be adjusted with the rotary switch SPINDLE OVERRIDE % to get the adequate speed.

The spindle doesn't rotate by executing the S comamlnd only, but rotate also by executing the command of spindle rotation CW (M03) or CCW (M04).

Note：If there is a hi-low speed gearbox, it is possible to shift step of spindle speed when executing the S command .

Formulas about cutting conditions：

1. Spindle speed

$$S = \frac{1000\,V}{\pi D}$$

Description：

S：Spindle speed (rpm)

V：Cutting speed (m／min)

π：Ludolphian number (3.14)

D：Tool diameter (mm)

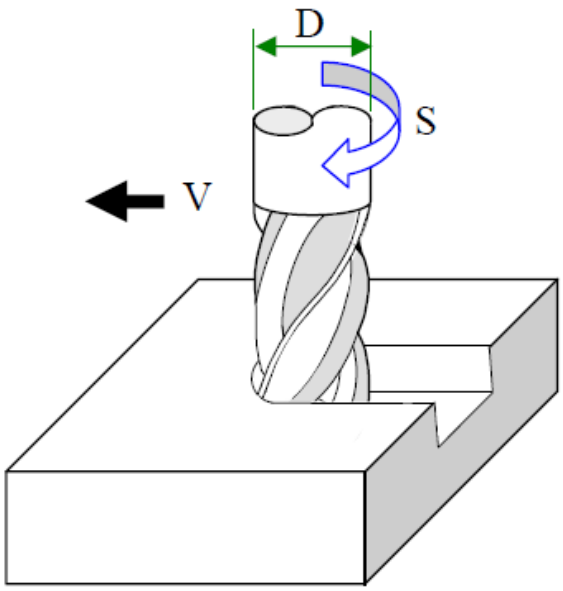

2. Pre-drilling diameter for tapped hole：

$$d = D - P$$

Cutting feedrate：

$$F = P \times S$$

Description：

d：Drill diameter (mm)

D：Thread diameter (mm)

P：Thread pitch (mm)

S：Spindle speed (rpm)

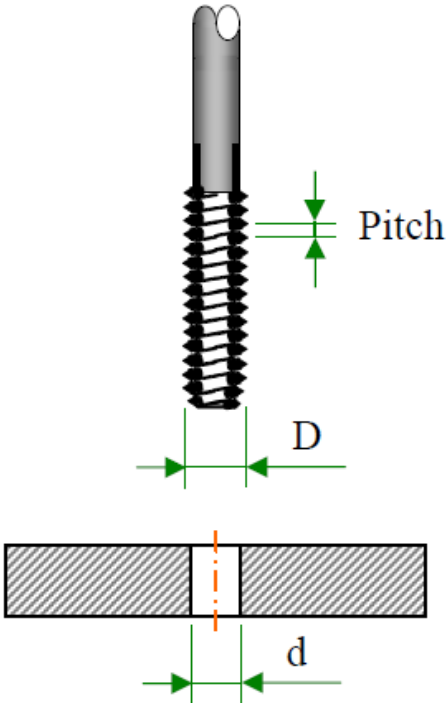

3. Calculation about length of drill tip with standard tip angle of 118°：

$$L = \frac{D}{2\sqrt{3}}$$

$$= 0.3\,D$$

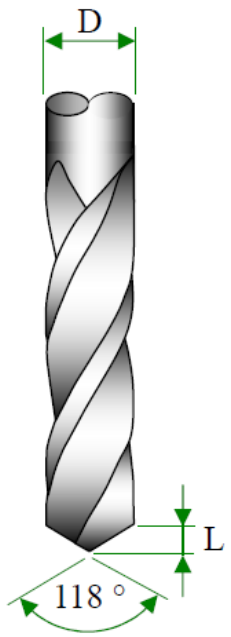

Cutting feedrate

$$F = fr \times S$$

Description：

L：Length of drill tip (mm)

D：Drill diameter (mm)

F：Feedrate (mm／min)

fr：Feed per rotation (mm／rev)

S：Spindle speed (rpm)

4. Cutting feedrate：

$$F = fz \times t \times S$$

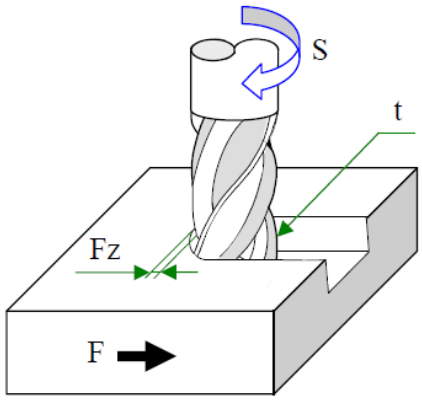

Description：

F：Feedrate (mm／min)

fz：Feed per blade (mm／blade)

t：Blade amount of the tool

S：Spindle speed (rpm)

Example：

Conditions：Tool diameter：φ 100 mm (D)

Cutting speed：100 m／min (V)

Ludolphian number：3.14 (π)

Feed per blade：0.1 mm／tooth (fz)

Blade amount of tool：5 tooth (t)

Spindle speed $S = \frac{1000\,V}{\pi\,D} = \frac{1000 \times 100}{3.14 \times 100}$

$= 318$ rpm

Cutting feedrate $F = fz \times t \times S = 0.1 \times 5 \times 318 = 159$mm／min.

$= 159$ mm／min

1.4 T Function

The T function is also called as tool function. The value following the T command specifies the tool number to be called. When a T code is executed, the called tool moves to the standby position, but no tool change yet.

Note：When different T codes are commanded in the same block, the last one is the effective one.
Example：T01 T02； → The command T02 is the effective.

1.5 G Code Use Composition

Positioning (G00)

Use of the command：

It is used for positioning without cutting and with rapid movement. The rapid moving speed for positioning follows the specification of the machine.

Format：

G00 X__ Y__ Z__ ；

Meaning of command：

X, Y, Z：Coordinates of the end position

Example：

Asume the tool is at the current position of (X-15. Y-100.). It will move rapidly to the position of (X-30.Y-30.).

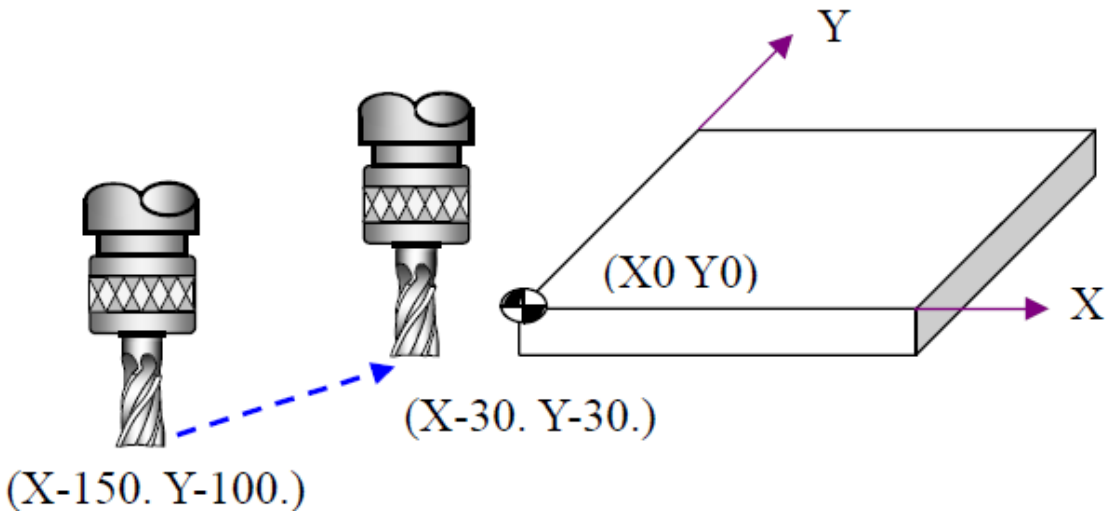

```
O1000 ;
G80 G40 G49 G00 G17 ;
G90 G54 X-150. Y-100. ; → Current position
G00 X-30. Y-30. ;
M30 ;
```

Parameter

No.	Meaning
1401 # 1	Positioning is performed with 0 : non–linear positioning 1 : linear interpolation
1601 # 5	Inposition check at deceleration 0 : performed 1 : not performed

Description on linear and non–linear interpolation.

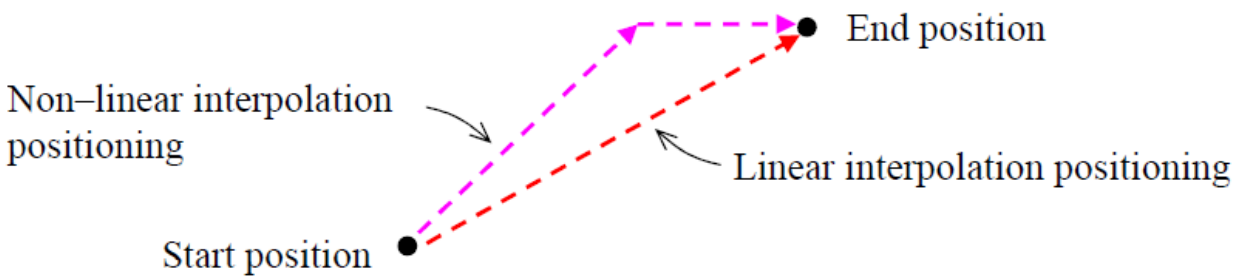

Note : (1) The above example is written with the absolute command G90 (referring to the article of G90 absolute／G91 incremental commands) and without considering the Z axis position.

(2) The moving feedrate of G00 can be adjusted with the rotary switch "RAPID FEEDRATE %" on the operating panel.

Linear Interpolation

Use of the command：

It is used for a straight path with cutting. The moving speed is specified with the F feedrate command.

Format：

G01 X__ Y__ Z__ F__ ；

Meaning of command：

X, Y, Z：Coordinates of the end position

F：Feedrate

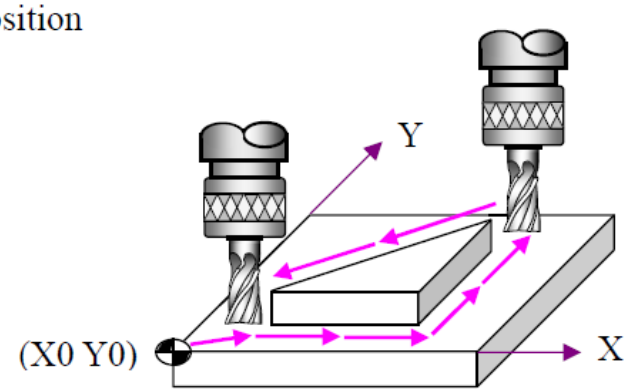

Example：

O1000；
G80 G40 G49 G00 G17；
G90 G54 X0 Y0；
G43 Z3. H01 M3 S800；
G01 Z-5. F80；
X50. Y40. F160； → Linear interpolation
X150. Y40.； → Linear interpolation
X150. Y120.； → Linear interpolation
X50. Y40.； → Linear interpolation
Z3.；
G49 G00 Z0 M5；
M30；

Parameter

No.	Meaning
3402 # 0	Mode entered when the power is turned on 0：G00 mode (positioning) 1：G01 mode (linear interpolation)

Note：Because G01 is a modal G code, if there are continuous cutting actions, the command G01 in the latter blocks can be omitted.

Optional Angle Chamfering and Corner Rounding

Use of the command：

It is used for chamfering or corner rounding under the following conditions：

1. A straight line connects another straight line.
2. A straight line connects an arc.
3. An arc connects a straight line.
4. An arc connects another arc.

Format：

G01 X__ Y__ , C__ ；
G01 X__ Y__ , R__ ；

Meaning of command：

X, Y：Coordinates of the end position
C：Chamfering value (45°)
R：Rounding radius

Example：

1. Automatic chamfering

G91 G01 X100. , C10. ；
X100. Y100. ；

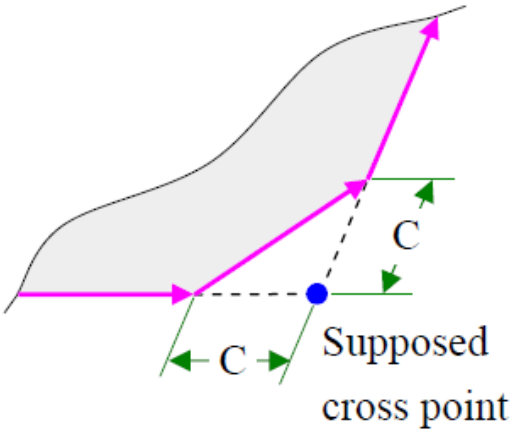

2. Automatic corner rounding

G91 G01 X100. , R10. ；
X100. Y100. ；

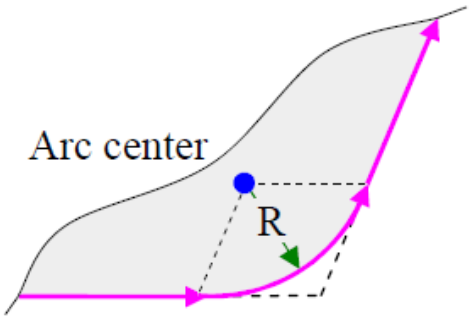

Circular Interpolation (G02 / G03)

Use of the command：

It is used for cutting of normal arc path. The cutting direction can be specified.

Format：

(X_P - Y_P) G17 G02／G03 X__ Y__ R__ F__ ; or
G17 G02／G03 X__ Y__ I__ J__ F__ ;

(Z_P - X_P) G18 G02／G03 Z__ X__ R__ F__ ; or
G18 G02／G03 Z__ X__ I__K__ F__ ;

(Y_P - Z_P) G19 G02／G03 Y__ Z__ R__ F__ ; or
G19 G02／G03 Y__ Z__ J__ K__ F__ ;

Meaning of command：

X, Y, Z：Coordinates of the end position
I：The vector from the start point of cutting to the arc center along X axis.
J：The vector from the start point of cutting to the arc center along Y axis.
K：The vector from the start point of cutting to the arc center along Z axis.
R：Arc radius
F：Feedrate

Description on I, J, K, R and judgement of the positive or negative value：

1. From the start point to the arc center, the vector values are I along the X axis, J along the Y axis and K along the Z axis.
2. The values of I, J and K are positive when the arc center is located at the positive side along the corresponding axes of the start point and negative when the arc center at the negative side of the start point.

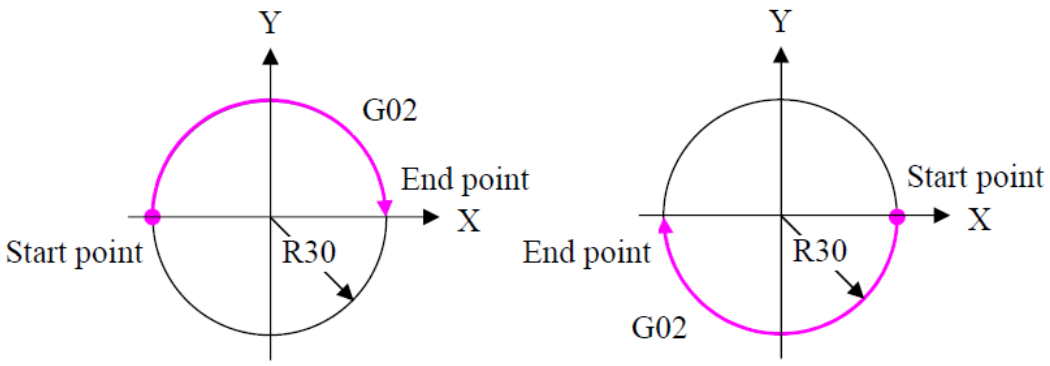

I = 30, J = 0 I = –30, J = 0

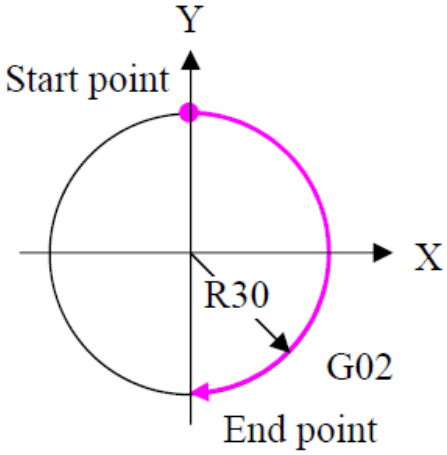

I = 0, J = –30

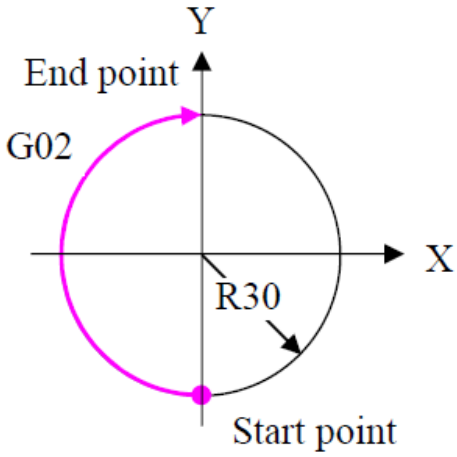

I = 0, J = 30

3. R is the commanded value of the arc radius. The R value is positive when the arc is less than or equals to 180°, and negative when the arc is greater than 180° and less than 360°.

   For full circle (360°) cutting, the I, J and K commands are necessary. We suggest to choose the position at 0°, or 90°, or 180°, or 270° as the start point for simplifying caluculation and easier error detection.

   Because the start point and the end point are the same, the X and Y commands in the format can be omitted.

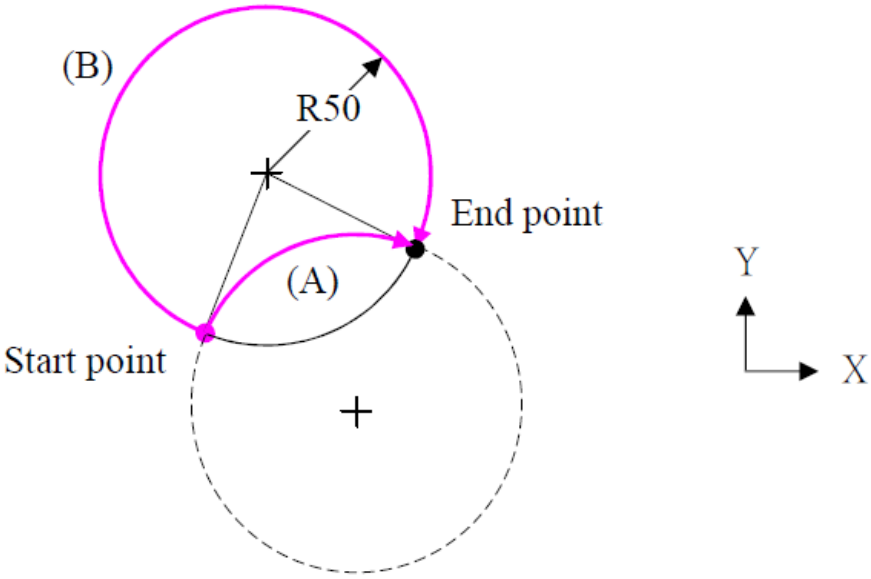

Arc is less than 180° → Path (A) G91 G02 X60. Y20. **R+50.** F100 ;

Arc is greater than 180° →Path (B) G91 G02 X60. Y20. **R–50.** F100 ;

4. For full circle cutting, the command is G02 I__, or G02 J__, or G02 K__. If command is given as G02 R__, there will be no action at all and no alarm occurs.

5. If commands I, J, K and R are given in the same block, there will be no action at all and no alarm occurs.

Note：For selecting the plane of cutting path, please refer to the section of G17／G18／G19 Cutting plane selection.

Example：

Conditions：Tool diameter φ 20 mm
spindle speed 800 rpm,
Feedrate 160 mm／min
Arc radius 50 mm
cutting depth 5 mm along Z axis

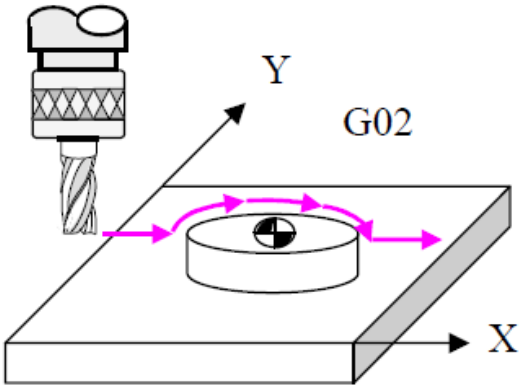

1. 0～180°

```
O1000；
G80 G40 G49 G00 G17；
G90 G54 X-70. Y0；
G43 Z3. H01 M3 S800；
G01 Z-5. F80；
X-50. Y0 F160；
G02 X50. Y0 R50.；
G01 X70. Y0；
Z3.；
G49 G00 Z0 M5；
M30；
```

Or

```
O1000；
G80 G40 G49 G00 G17；
G90 G54 X-70. Y0；
G43 Z3. H01 M3 S800；
G01 Z-5. F80；
X-50. Y0 F160；
G02 X50. Y0 I50. J0；
G01 X70.Y0；
Z3.；
G49 G00 Z0 M5；
M30；
```

Note：(1) The above example doesn't consider the tool radius offset. For tool radius offset, please refer to the section of G40/G41/G42 Cutter compensation.
(2) In the program, the commanded dimension is φ 100mm. Because it doesn't consider the tool radius offset, the actual dimension after cutting becomes φ 80mm.

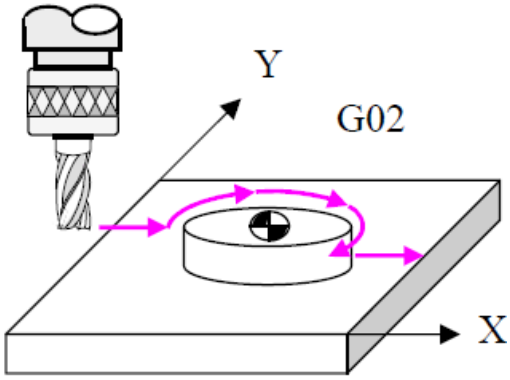

2. 181°～359°

```
O1000；
G80 G40 G49 G00 G17；
G90 G54 X-70. Y0；
G43 Z3. H01 M3 S800；
G01 Z-5. F80；
X-50. Y0 F160；
G02 X35.35 Y-35.35 R-50.；
G01 X70. Y-35.35；
Z3.；
G49 G00 Z0 M5；
M30；
```

Or

```
O1000；
G80 G40 G49 G00 G17；
G90 G54 X-70. Y0；
G43 Z3. H01 M3 S800；
G01 Z-5. F80；
X-50. Y0 F160；
G02 X35.35 Y-35.35 I35.35 J0；
G01 X70. Y-35.35；
Z3.；
G49 G00 Z0 M5；
M30；
```

3. 360°

```
O1000；
G80 G40 G49 G00 G17；
G90 G54 X-70. Y0；
G43 Z3. H01 M3 S800；
G01 Z-5. F80；
X-50. Y0 F160；
G03 I50. J0；
G01 X-70. Y0；
Z3.；
G49 G00 Z0 M5；
M30；
```

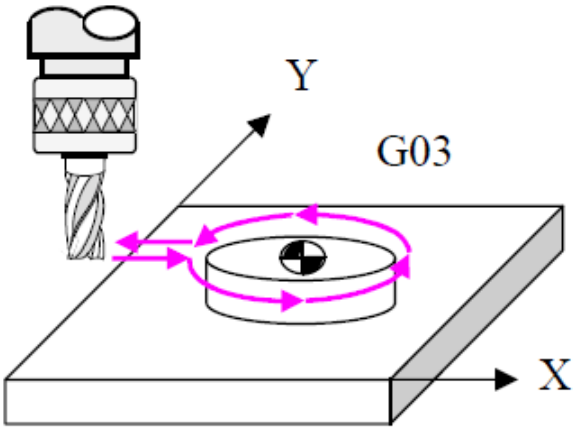

Helical Interpolation (G/02 / G03)

Use of the command：

The helical interpolation is an arc movement along two axes combined with linear movement along the third axis with constant speed at the same time. Then, it becomes a path like a thread.

It is used for normal thread cutting and the cutting direction can be specified.

Format：

(X_P - Y_P) G17 G02／G03 X__ Y__ Z__ R__ F__ ; or
G17 G02／G03 X__ Y__ Z__ I__ J__ F__ ;

(Z_P - X_P) G18 G02／G03 X__ Y__ Z__ R__ F__ ; or
G18 G02／G03 X__ Y__ Z__ I__K__ F__ ;

(Y_P - Z_P) G19 G02／G03 X__ Y__ Z__ R__ F__ ; or
G19 G02／G03 X__ Y__ Z__ J__ K__ F__ ;

Meaning of command：

X, Y, Z：Coordinates of the end position
I：The vector from the start point of cutting to the arc center along X axis.
J：The vector from the start point of cutting to the arc center along Y axis.
K：The vector from the start point of cutting to the arc center along Z axis.
R：Arc radius
F：Feedrate

Description on I, J, K, R and judgement of the positive or negative value：

1. From the start point to the arc center, the vector values are I along the X axis, J along the Y axis and K along the Z axis.
2. The values of I, J and K are positive when the arc center is located at the positive side along the corresponding axes of the start point and negative when the arc center at the negative side of the start point.

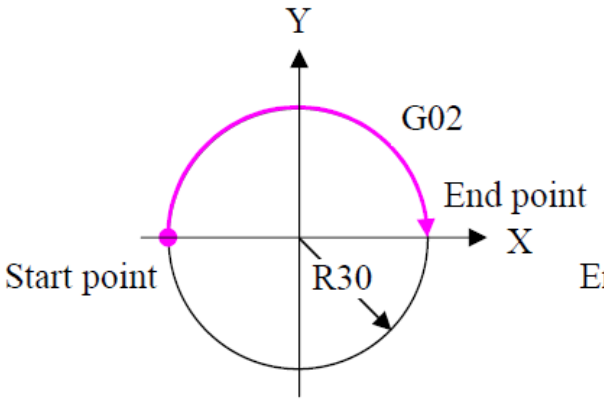

I = 30, J = 0

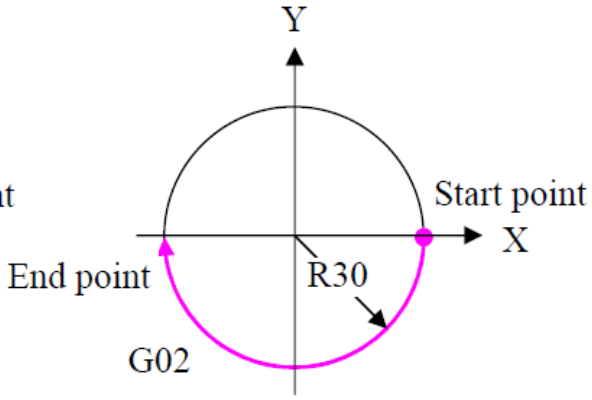

I = –30, J = 0

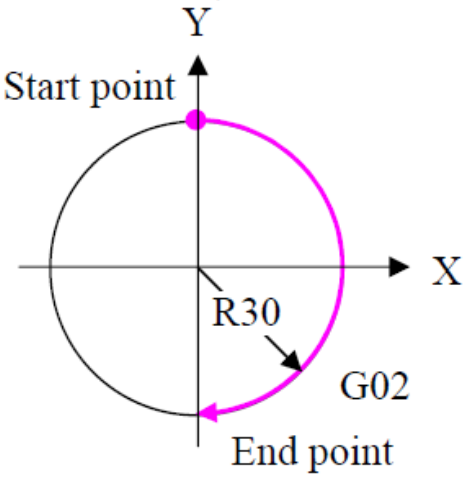

I = 0, J = –30

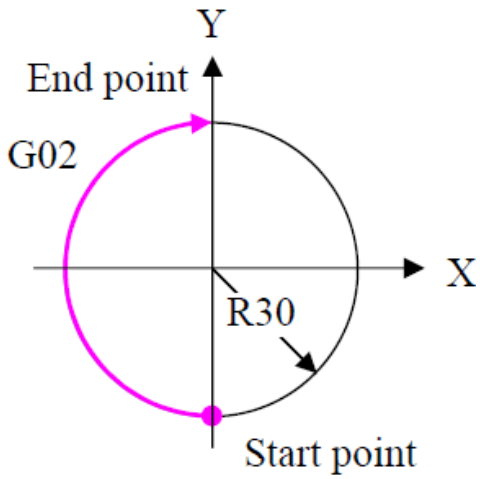

I = 0, J = 30

3. R is the commanded value of the arc radius. The R value is positive when the arc is less than or equals to 180°, and negative when the arc is greater than 180° and less than 360°.

   For full circle (360°) cutting, the I, J and K commands are necessary. We suggest to choose the position at 0°, or 90°, or 180°, or 270° as the start point for simplifying caluculation and easier error detection.

   Because the start point and the end point are the same, the X and Y commands in the format can be omitted.

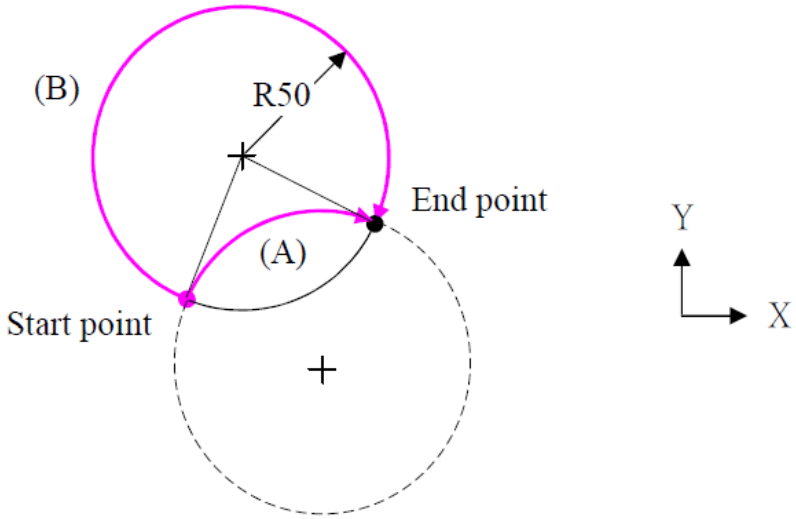

Arc is less than 180° → Path (A) G91 G02 X60. Y20. **R+50.** F100；

Arc is greater than 180° → Path (B) G91 G02 X60. Y20. **R–50.** F100；

4. For full circle cutting, the command is G02 I__, or G02 J__, or G02 K__. If command is given as G02 R__, there will be no action at all and no alarm occurs.

5. If commands I, J, K and R are given in the same block, there will be no action at all and no alarm occurs.

Note：For selecting the plane of cutting path, please refer to the section of G17／G18／G19 Cutting plane selection.

Example：

Conditions：Tool diameter φ 20 mm
spindle speed 800 rpm
Feedrate 160 mm／min
Arc radius 50 mm
cutting depth 20 mm along Z axis

1. 0～180°

```
O1000；
G80 G40 G49 G00 G17；
G90 G54 X0 Y70.  ；
G43 Z3. H01 M3 S800；
G01 Z0 F80；
G01 X0 Y50. F160；
G02 X0 Y-50. Z-20. R50.；
G01 X0 Y-70.；
Z3.；
G49 G00 Z0 M5；
M30；
```

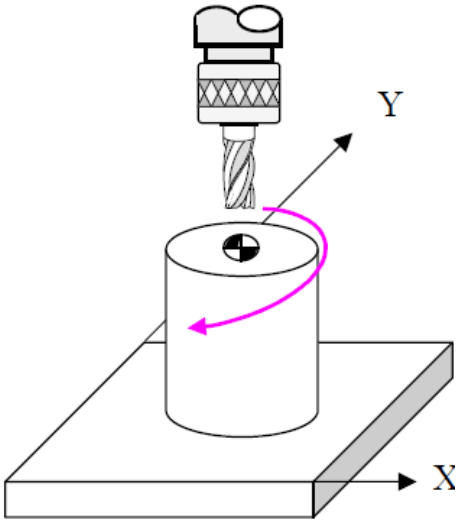

or

```
O1000；
G80 G40 G49 G00 G17；
G90 G54 X0 Y70.；
G43 Z3. H01 M3 S800；
G01 Z0 F80；
G01 X0 Y50. F160；
G02 X0 Y-50. Z-20. I0 J-50.；
G01 X0 Y-70.；
Z3.；
G49 G00 Z0 M5；
M30；
```

2. 181°～359°

```
O1000；
G80 G40 G49 G00 G17；
G90 G54 X-35.35 Y70.；
G43 Z3. H01 M3 S800；
G01 Z0 F80；
G01 X-35.35 Y35.35 F160；
G03 X50. Y0 Z-20. R-50.；
G01 X70. Y0；
Z3.；
G49 G00 Z0 M5；
M30；
```

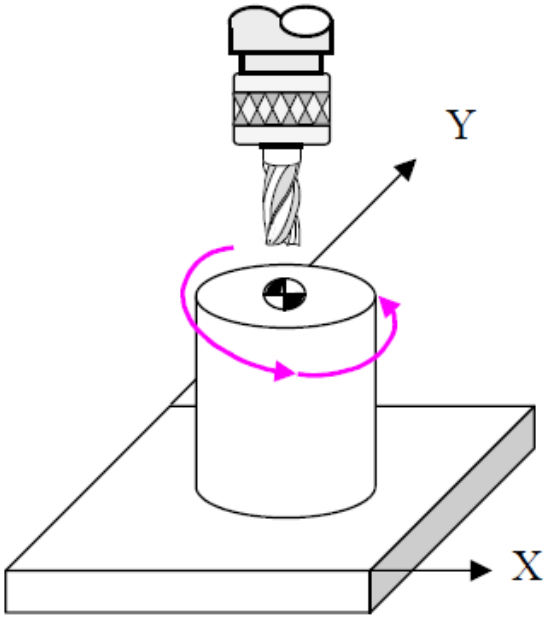

or

```
O1000；
G80 G40 G49 G00 G17；
G90 G54 X-35.35 Y70.；
G43 Z3. H01 M3 S800；
G01 Z0 F80；
G01 X-35.35 Y35.35 F160；
G03 X50. Y0 Z-20. I35.35 J-35.35；
G01 X70. Y0；
Z3.；
G49 G00 Z0 M5；
M30；
```

3. 360°

```
O1000；
G80 G40 G49 G00 G17；
G90 G54 X0 Y70.；
G43 Z3. H01 M3 S800；
G01 Z0 F80；
G01 X0 Y50. F160；
M98 P42000；
G90 G00 G40 X0 Y70.；
Z3.；
G49 G00 Z0 M5；
M30；

O2000；
G91 G03 I0 J-50. Z-10.；
M99；
```

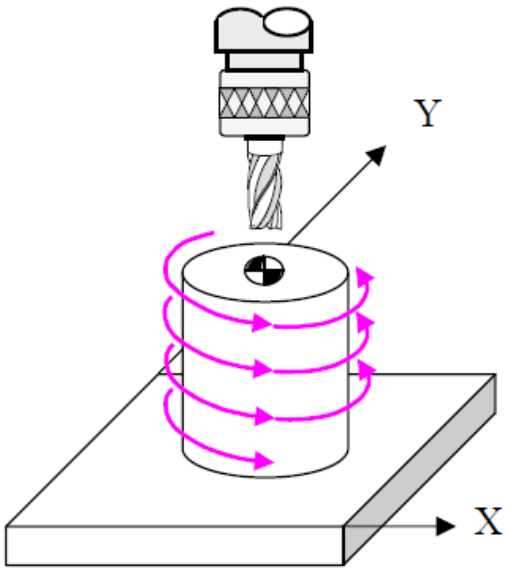

Note：The maximum arc angle for the helical interpolation in a block is 360°. Therefore, if continuous full circle helical cutting is needed, the editing manner of M98 Main program calling subprogram can be used for simplifying the program.
(Please refer to the section of M98／M99 subprogram calling.)

Dwell

Use of the command：

It is used for a specified time interval of pause in the program.

Format：

G04 X__ ；or

G04 P__ ；

Meaning of command：

X：Pause time(unit：sec.), decimal point permitted.

P：Pause time(unit：0.001sec.), decimal point not permitted.

Example：

Pause for 2 seconds at the hole bottom.

```
O1000；
G80 G40 G49 G00 G17；
G90 G54 X0 Y0；
G43 Z3. H01 M3 S800；
G01 Z-5. F80；
G04 X2.；
G00 Z3.；
G49 G00 Z0 M5；
M30；
```

Or

```
O1000；
G80 G40 G49 G00 G17；
G90 G54 X0 Y0；
G43 Z3. H01 M3 S800；
G01 Z-5. F80；
G04 P2000；
G00 Z3.；
G49 G00 Z0 M5；
M30；
```

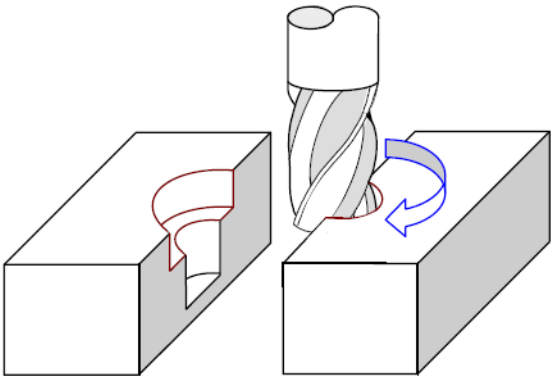

Pause for 2 seconds at the hole bottom.

Note：(1) The G04 is a one – shot G code. It is effective only for the specified block with this code.

(2) If X or P command is omitted, the G04 is the same function as the the code G09 Exact Stop.

(3) If the P command value is with decimal point, the alarm No. 007 will occur.

Exact Stop (G09)

Use of the command：

When higher precision is required at the point to change moving direction, it is used for confirming in-position for the specified block and then continue the next block.

Format：

G09 G__ X__ Y__ ；

Meaning of command：

Add the command G09 in the block which needs the function of exact stop.

Example：

```
O1000 ;
G80 G40 G49 G00 G17 ;
G90 G54 X0 Y0 ;
G43 Z3. H01 M3 S800 ;
G01 Z-5. F80 ;
G01 X10. Y10. F160 ;
G09 X100. Y10. ;
G09 X100. Y90. ;
G09 X10. Y90. ;
G09 X10. Y10. ;
G00 X0 Y0 ;
Z3. ;
G49 G00 Z0 M5 ;
M30 ;
```

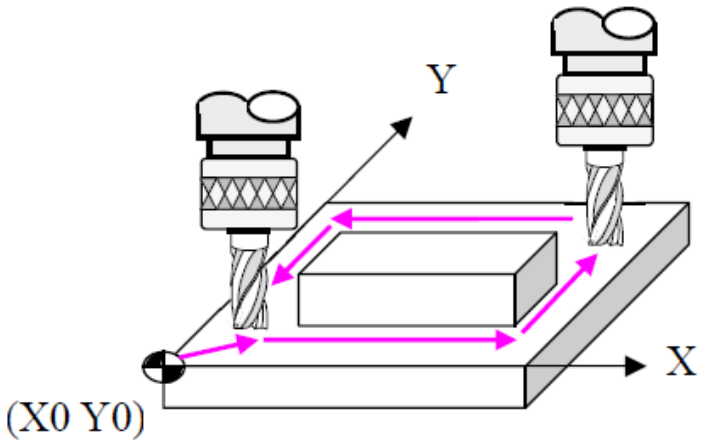

Note：(1) The G09 is a one – shot G code. It is effective only for the specified block with this code.

(2) If every movement needs this function, the G09 must be written in all blocks of movement.

Programmable Data Input (G10)

Tool length offset／radius offset

Use of the command：

It is used for changing a tool length offset or a radius offset automatically during program execution.

Format：

G10 L__ P__ R__ ;

Meaning of command：

L：Type No. of compensation.
P：Offset number.
R：Offset value.

1. Tool offset memory A

G10 L11 P __ R __ ；(Geometry offset value H／D)

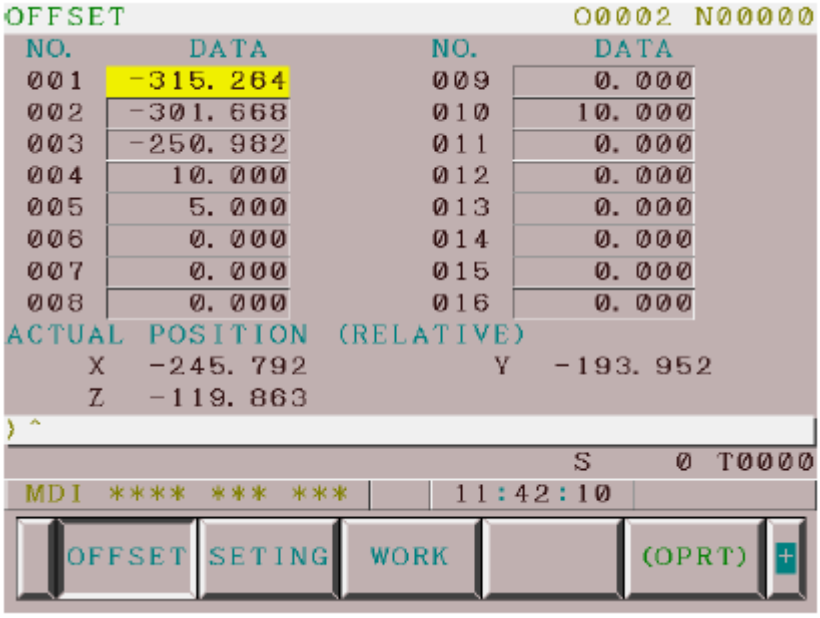

2. Tool offset memory B

G10 L10 P __ R __ ; (Geometry offset value H／D)

G10 L11 P __ R __ ; (Wear offset value H／D)

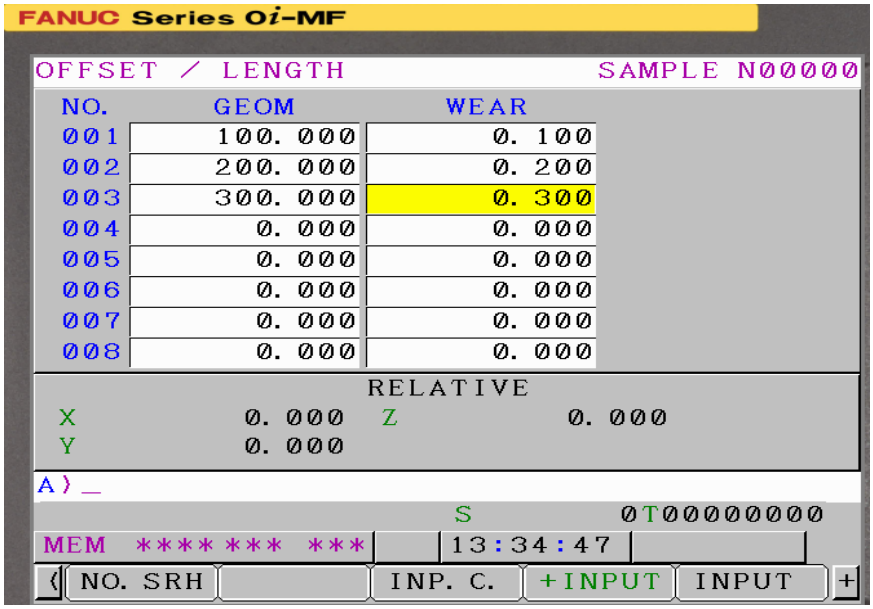

3. Tool offset memory C

G10 L10 P __ R __ ; (Geometry offset value／H)

G10 L12 P __ R __ ; (Wear offset value／D)

G10 L11 P __ R __ ; (Geometry offset value／H)

G10 L13 P __ R __ ; (Wear offset value／D)

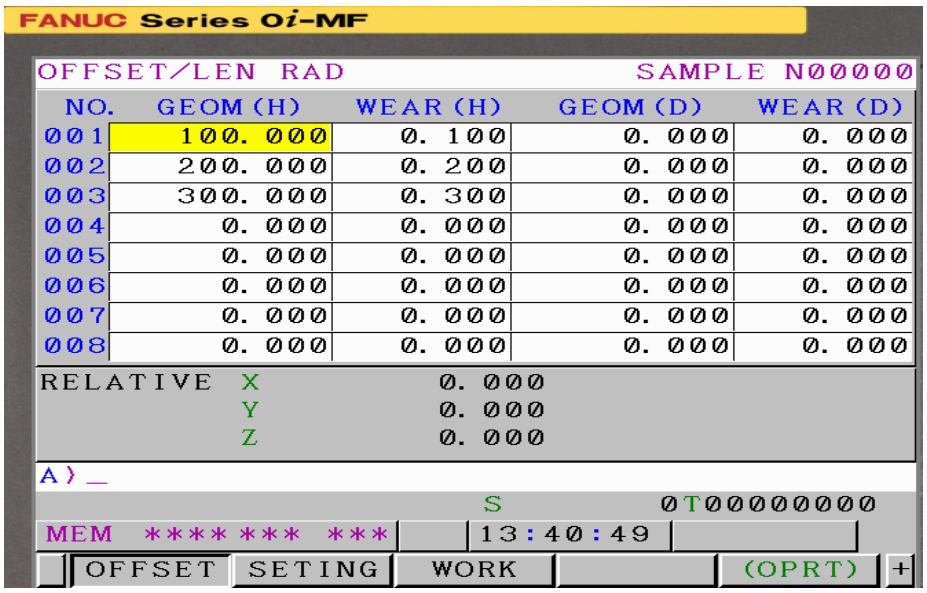

Example：

Change the tool length offset setting of No.6 as –200.

(Memory mode A of tool length compensation)

O1000；

G90 G10 L11 P6 R-200.；

M30；

Workpiece Coordinate System Data

Use of the command：

It is used for changing settings of a work coordinate system automatically during program execution.

Format：

G10 L__ P__ X__ Y__ Z__ ；

Meaning of command：

L：Group No. of work coordinate system.

P：Work coordinate system number.

X, Y, Z：Setting value of work coordinate system.

1. Standard work coordinate system (G54～G59)

G10 L2 P__ X__ Y__ Z__ ；

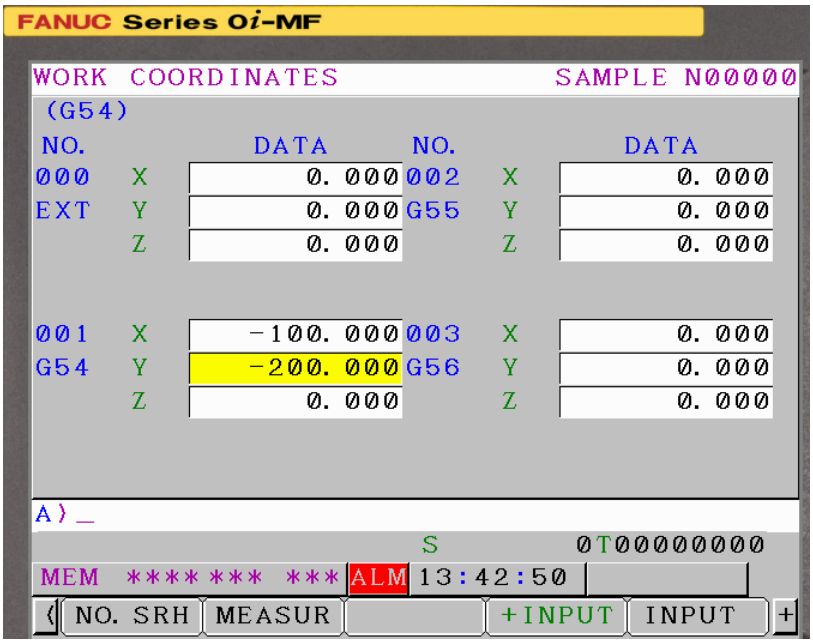

2. Extended work coordinate system (G54.1 P1～P48／G54.1 P1～P300)

G10 L20 P__ X__ Y__ Z__ ;

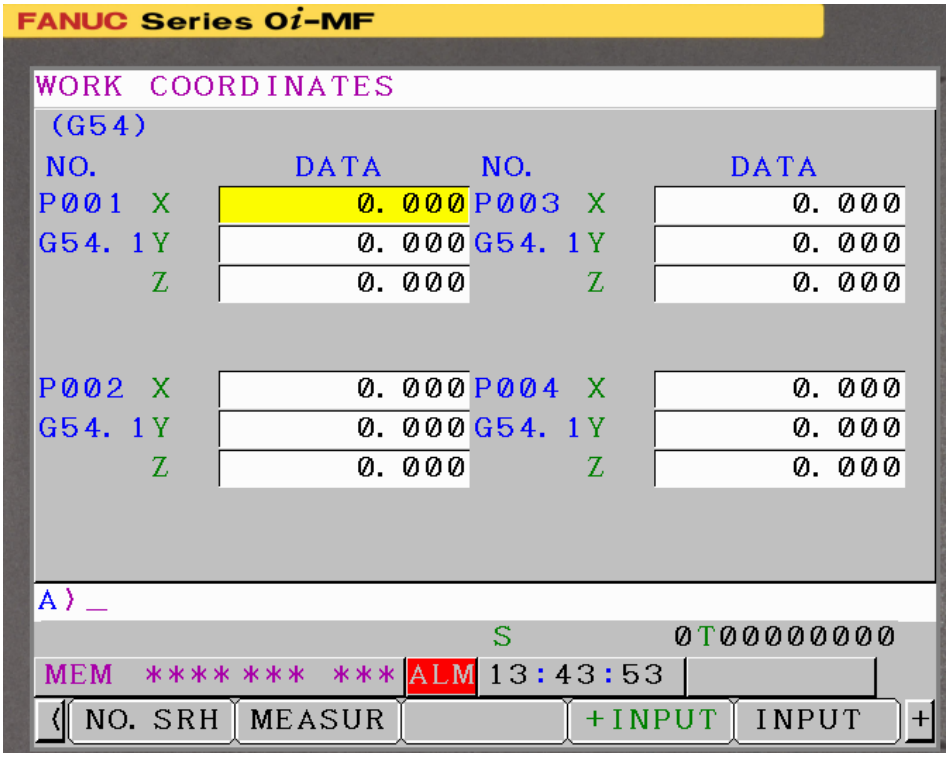

Example：

Change the offset settings in the 5th work coordinate system (G58) as (X-300. Y-400. Z0)

O1000 ;
G90 G10 L2 P5 X-300. Y-400. Z0 ;
M30 ;

Note：If the status is incremental G91 (referring to the section of G90／G91 Absolute／Incremental commands) before the command G10, the offset setting will be executed as the incremental mode.

Programmable Parameter Input (G10／G11)

Use of the command：

It is used for changing a parameter setting or pitch error offset automatically during program execution.

Format：

G10 L50；
N__ P__ R__ ；
G11；

Meaning of command：

G10：Automatic programmable parameter input ON.
L50：Executing the function of automatic programmable parameter input.
N：Parameter No.
P：Axis No.
R：Setting value of the parameter.
G11：Automatic programmable parameter input OFF.

Example：

(This is just an example for explanation. Do not do the same setting into the machine parameter.)

1. Assume parameters will be changed as the No.1406 to 0000 0001, No.1410 to 8000 and No.1420 Z axis to 24000, the program will be as follows：

```
O1000；
G10 L50；
N1406 R00000001；
N1410 R8000；
N1420 P3 R24000；
G11；
M30；
```

2. Assume the pitch error offset will be changed as the No.0 to –1 and No.10 to 2, the program will be as follows：

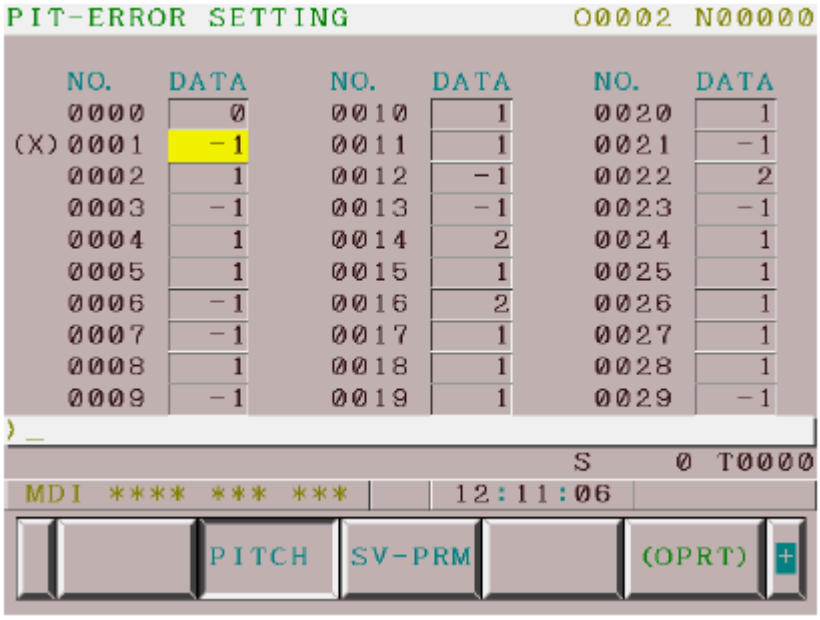

O2000；

G10 L50；

N10000 R-1；→ No.0

N10010 R2；→ No.10

G11；

M30；

(N：Block No. of pitch error offset = 10000 + offset No.)

Note：(1) Generally, the R address cannot be written with decimal point.

(2) Other NC commands cannot be used under this mode.

(3) Before executing this function, the command G80 has to be used for canceling canned cycles.

Polar Coordinate Command (G15／G16)

Use of the command：

The end point of movement in the program can be expressed with the polar coordinate system and commanded in radius and angle (usually used for canned cycle).

Format：

G16 X__ Y__ ；
G15 ；

Meaning of command：

G16：Polar coordinate command ON.
X：Radius
Y：Angle
G15：Polar coordinate command OFF.

Example：

```
O1000 ;
G80 G40 G49 G00 G17 ;
G90 G54 G00 X0 Y0 ;
G43 Z3. H01 M3 S800 ;
G98 G81 Z-10. R3. F160 K0 ;
G16 ;
X50. Y0 ;
Y45. ;
Y90. ;
Y135. ;
Y180. ;
Y225. ;
Y270. ;
Y315. ;
G15 ;
Z30. ;
G80 ;
G49 G00 Z0 M5 ;
M30 ;
```

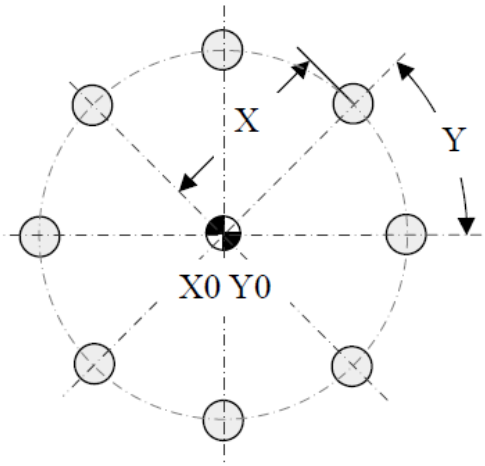

If the program is written in incremental command, the program can be simplified as G91 Y45. K7. ；

Plane Selection (G17／G18／G19)

Use of the command：

It is used to define the work plane for arc cutting movement.

Format：

G17；
G18；
G19；

Meaning of command：

G17：X-Y plane
G18：Z-X plane
G19：Y-Z plane

Example：

```
O1000；
G17；
 :
 :
M30；
```

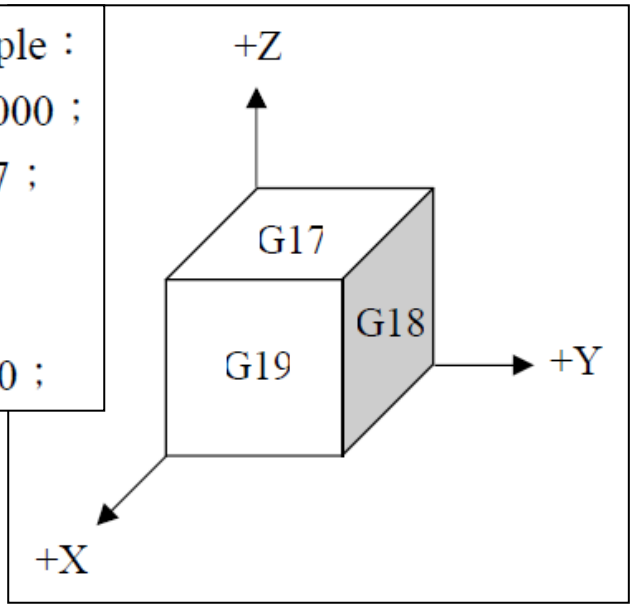

Parameter

No.	Meaning
5101 # 0	The drilling axis in the drilling canned cycle is 0：Always the Z–axis 1：The axis selected by the program
3402 # 2, # 1	Plane selected when power is turned on 0, 0：G17 mode (X_P - Y_P) 0, 1：G18 mode (Z_P - X_P) 1, 0：G19 mode (Y_P - Z_P)

Note：(1) G17 plane can be set as the status when machine start by parameter setting.
(2) If the work plane changes during cutting, the command of plane selection has to be changed too.
(3) If the work axis is not in the selected work plane during arc cutting (G02／G03), the alarm No.021 will occur.

Inch and Metric Conversion (G20／G21)

Use of the command：

It is used for switching inch input or metric input.

Format：

G20；
G21；

Meaning of command：

G20：Inch input.

G21：Metric input.

Increment system	Least input increment
ISB	0.001 mm 0.0001 inch
ISC	0.0001 mm 0.00001 inch

Example：

Enter X1.23456

Increment system	Display
ISB	1. 234 mm 1.2345 inch
ISC	1.2345 mm 1.23456 inch

Either inch or metric input can be selected on screen.

1. Under the MDI mode, press the function key [OFFSET SETTING]

2. Press the soft key [SETING].

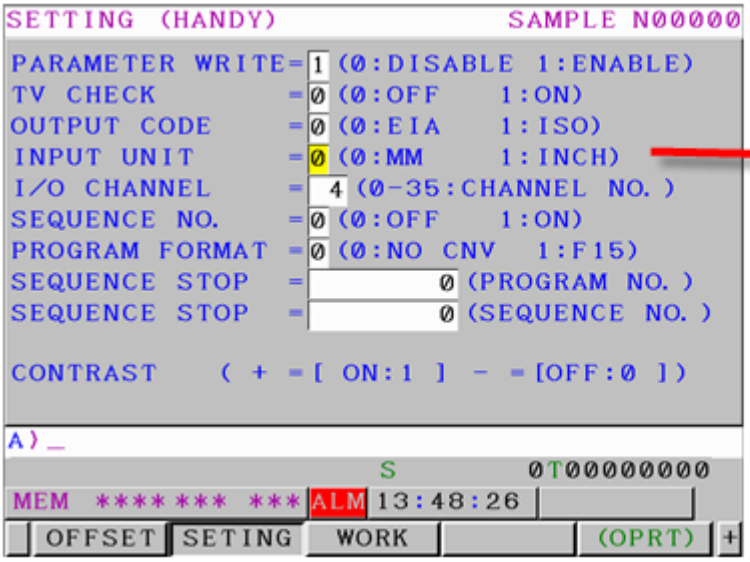

0 : MM
1 : INCH

3. Move the cursor to the " INPUT UNIT " by pressing cursor keys.

4. Path 1. (1) Press the soft key [(OPRT)].

(2) Press the soft key [ON : 1] or [OFF : 0].

Path2. (1) Press numeric keys [1] or [0] .

(2) Press the input key [INPUT] or press the soft key [INPUT].

Parameter

No.	Meaning
1001 # 0	Least command increment on the linear axis 0 : In mm 1 : In inches
5006 # 0	When the unit is switched between the inch and metric systems, automatic tool offset value conversion is 0 : Not performed 1 : Performed

Note : Combined use of the inch system and the metric system is not allowed.

Return to Reference Position (G28)

Use of the command：

It is used for executing machine origin return in program.

Format：

G28 X__ Y__ Z__ ；

Meaning of command：

The command G28 includes to return the first reference point too. Therefore, it is not necessary to specify the coordinates of the origin. When X, Y, Z axes are commanded to return the machine origin, machine crash such as tool colliding the workpiece can be avoided by passing the first refernce point. The command G91 is used together usually.

Example：

```
O1000 ;
G80 G40 G49 G00 G17 ;
G91 G28 X-300. Y50. Z250. ;
 :
 :
M30 ;
```

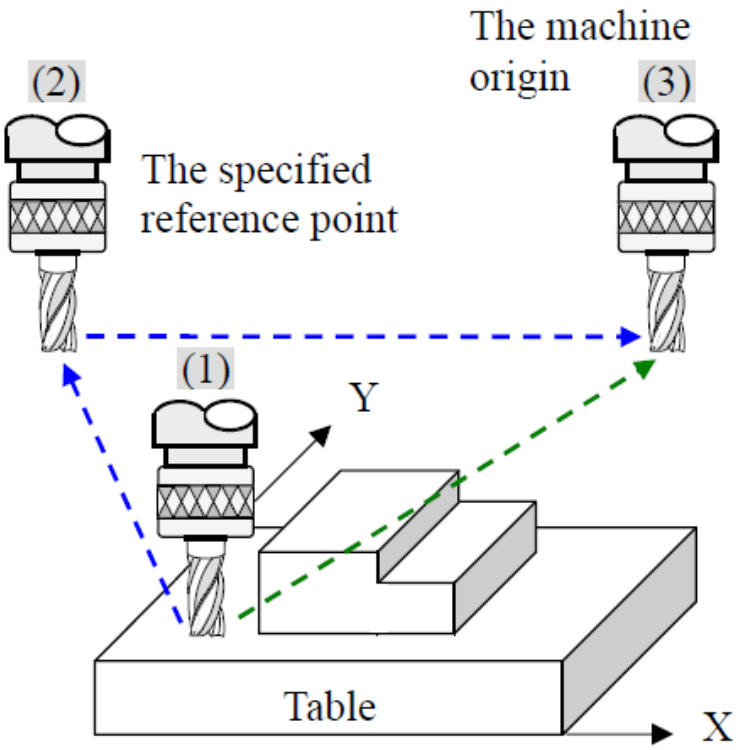

It is possible to get crash if the tool moves from (1) → (3) directly. So, change the moving path as (1) → (2) → (3) is the proper one.

Note：(1) For the X,Y,Z values with the command G28, they are just the coordinates of the absolute program origin when G90 is used, and are the position relative to the current tool position when G91 is used.

(2) Usually, G28 is used as follows(The tool returns the machine origin directly.)

O1000；

G80 G40 G49 G00；

G91 G28 Z0； → Z axis returns the machine origin.

G28 X0 Y0； → X,Y axes return the machine origin.

Return from Reference Position (G29)

Use of the command：

It is used for moving the tool from the machine origin to the specified position by passing the specified reference point (G28 or G30) to avoid the possible machine crash.

Format：

G29 X__ Y__ Z__ ;

Meaning of command：

X, Y, Z：Coordinates of the destination that the tool arrives after the specified reference point.

Example：

Assume the current tool position is at (1).

O1000 ;

G80 G40 G49 G00 G17 ;

G91 G28 X650. Y350. ; (1) → (2) → (4)

G29 X900. Y150. ; (4) → (2) → (3)

:

:

M30 ;

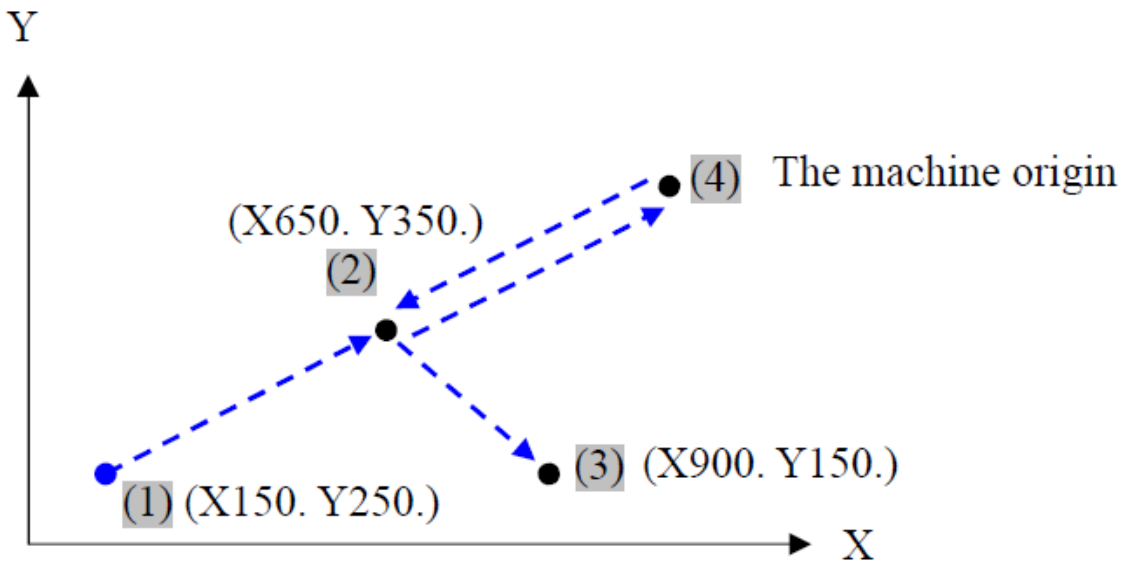

Note：(1) The above actions are all with rapid movement.

(2) Before the command G29 is used, the command G28 or G30 is needed usually for specifying the reference point in G29 movement.

2nd, 3rd and 4th Reference Position Return (G30)

Use of the command：

It is used to move the tool to return 2nd or 3rd or 4th reference point during program execution by passing a specified reference point

Format：

G30 X__ Y__ Z__ ;

Meaning of command：

P：Sequence no. of the reference point.

P2～The 2nd reference point, P3～The 3rd reference point,

P4～The 4th reference point

X, Y, Z：Coordinates of the specified reference point.

Example：

Assume：The current tool position is at (1).The 2nd reference point is set in the parameter No.1241 X = −600000, Y = −45000

O1000 ;

G80 G40 G49 G00 G17 ;

:

G90 G30 P2 X-200. Y-100. ; (1) → (2) → (3)

:

M30 ;

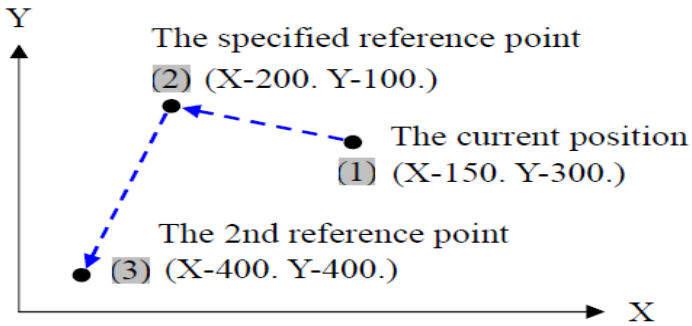

Parameter

No.	Meaning
1241	Coordinate value of the second reference position
1242	Coordinate value of the third reference position
1243	Coordinate value of the fourth reference position

Note：(1) The 2nd, 3rd and 4th reference points are set in the parameters with machine coordinates.
(2) The G29 can be used together.

Cutter Dimensional Compensation (G40／G41／G42)

Use of the command：

For cutting side face, the cutting path of the program should be along the outer edge and not along the center of the cutter. Because there is difference of cutter radius, a tool radius offset is applied in the program for compensating such difference and achieving the required actual cutting path.

Format：

G41／G42 X__ Y__ D__ F__ ；
G40 X__ Y__ ；

Meaning of command：

G41：Tool radius offset for shifting tool to the left.
G42：Tool radius offset for shifting tool to the right.
G40：Tool radius offset cancelled.
X, Y：Position of the tool arrival after offset applied or cancelled.
D：Offset no. for the tool radius.
F：Feedrate

Example：

```
O1000 ;
G80 G40 G49 G00 G17 ;
G90 G54 X-50. Y-50. ;
G43 Z3. H01 M3 S800 ;
G01 G42 X0 Y0 D11 F160 ;
X100. Y0 ;
X0 Y100. ;
X0 Y0 ;
G00 G40 X-50. Y-50 ;
Z3. ;
G49 G00 Z0 M5 ;
M30 ;
```

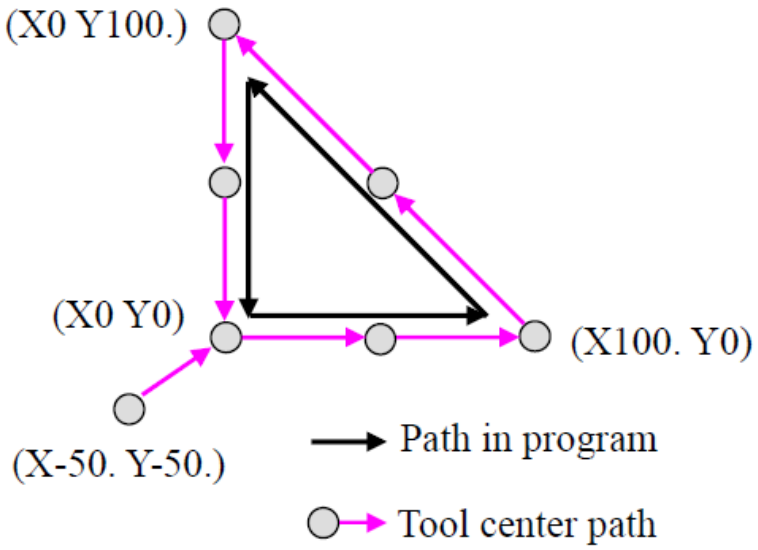

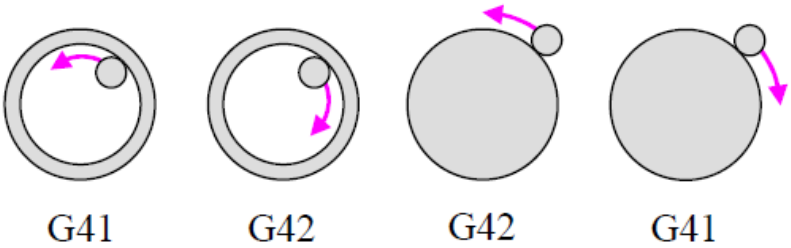

Note：(1) The offset No. for tool radii (D)and for tool lengths (H) are all displayed and set on the screen OFFSET.

(2) The selection of G41／G42 is based on the direction of tool movement during cutting

Tool Length Offset (G43／G44／G49)

Use of the command：

Because of different tool lengths during machining, heights from tool tip to the work datum plane become different for each tool. Therefore, the distance from tool tip to the work datum plane is measure in ahead and input it into the corresponding offset no. on the screen OFFSET. By using this function in the program, the tool can be moved to the specified position.

Format：

G43／G44 Z__ H__ ;
G49 ;

Meaning of command：

G43：Tool length offset for shifting to +Z direction.
G44：Tool length offset for shifting to -Z direction.
G49：Tool length offset cancelled.
Z：Position of the tool ariveal after offset applied or cancelled.
H：Offset no. for the tool length.

Example：

```
O1000 ;
G80 G40 G49 G00 G17 ;
G90 G54 X0 Y0 ;
G43 Z3. H01 M3 S800 ;   (On the screen OFFSET No.1 = –391.68)
G81 Z-20. F160 ;
G80 ;
G49 G00 Z0 M5 ;
M30 ;
```

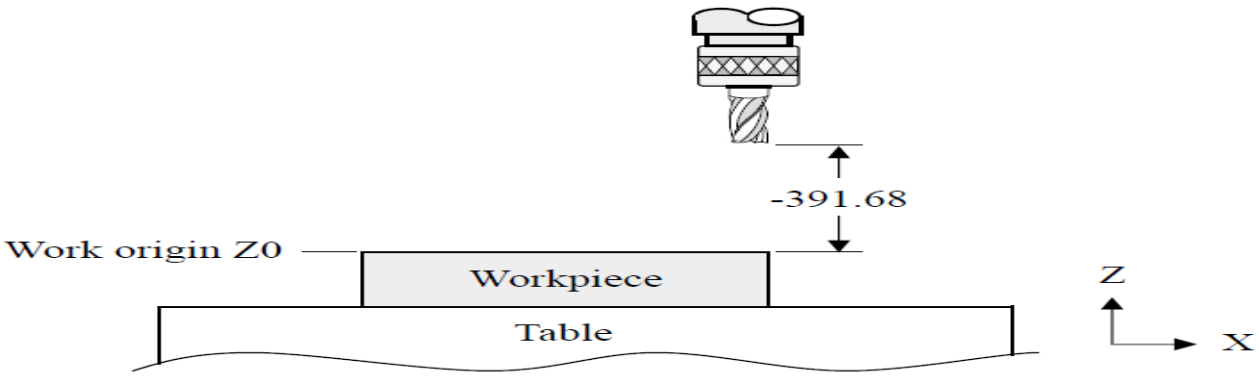

Scaling (G50／G51)

Use of the command：

To do magnification or contraction with some specified scale on the profile to be cut according to the path in program.

Format：

G51 X__ Y__ Z__ P__ ;
G51 X__ Y__ Z__ I__ J__ K__ ;
G50 ;

Meaning of command：

G51：Scaling ON.
G50：Scaling OFF.
X, Y, Z：Coordinates of the datum point for scaling.
P：cale for magnification or contraction (effective for all of X, Y, Z axes, unit as 0.001).
I, J, K：Scales specified for X, Y, Z axes individually.

Example：

Contraction on X, Y axes with scale 0.5

```
O1000 ;
G80 G40 G49 G00 G17 ;
G90 G54 X0 Y0 ;
G43 Z3. H01 M3 S800 ;
G81 Z-5. F160 ;
G90 G51 X52. Y42. I500 J500 K1000 ;
G01 X27. Y34. ;
X107. Y34. ;
X82. Y93. ;
X27. Y34. ;
G50 ;
Z3. ;
G49 G00 Z0 M5 ;
M30 ;
```

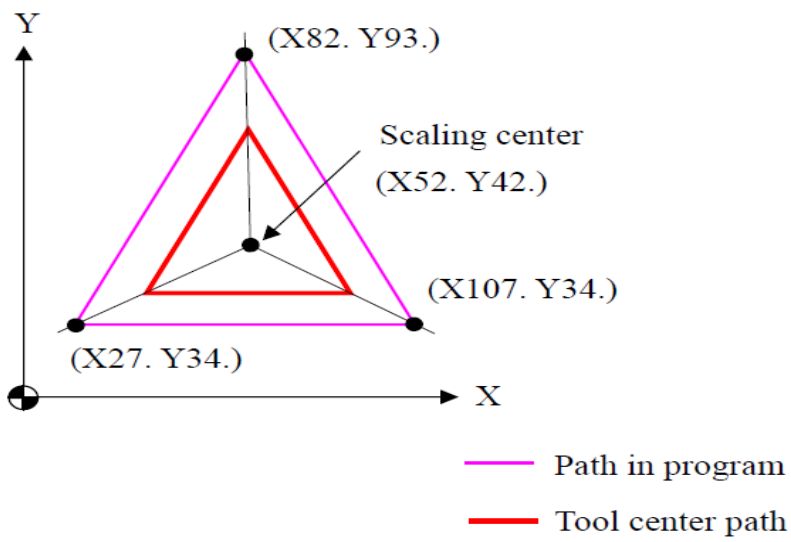

Parameter

No.	Meaning
12 # 1	Mirror image for each axis (Command not needed.) 0：Mirror image is OFF 1：Mirror image is ON
5400 # 7	Scaling magnification unit 0：0.00001 times 1：0.001 times
5411	The preset scale used when no scale is commanded.

Note：(1) Commands I, J, K specifiy scales for each axis individually. If any scale is not specified with command, the scale setting in the parameter (not a zero value) is followed by the controller. Every axis must be specified with a scale. Even if the scale is 1:1, the scale should be not omitted.

(2) A cutting of ellipse can't be done by combining G51 with G02／G03.

Programmable Mirror Image (G50.1／G51.1)

Use of the command：

In case that a mirror image along some axis is required, this function can be used for reducing a new programming.

Format：

G50.1 X__ Y__ ；
G51.1 ；

Meaning of command：

G50.1：Programmable mirror image ON.
G51.1：Programmable mirror image OFF.
X, Y, Z：The axis for mirror image and coordinates of the datum point.

Example：

```
O1000 ;  (Main program)
G80 G40 G49 G00 G17 ;
G90 G54 G0 X0 Y0 ;
G43 Z10. H01 S800 M3 ;
M98 P1001 ;  (1)
G50.1 X0 ;
M98 P1001 ;  (1) → (2)
G50.1 Y0 ;
M98 P1001 ;  (2) → (3)
G50.1 X0 Y0 ;
M98 P1001 ;  (3) → (4)
G51.1 ;
G91 G28 Z0 M5 ;
M30 ;
```

```
O1001 ;  (Subprogram)
G90 G0 X50. Y50. ;
G01 Z-5. F100 ;
X100. F200 ;
Y100. ;
X50. Y50. ;
Z5. ;
G0 Z30. ;
X0 Y0 ;
M99 ;
```

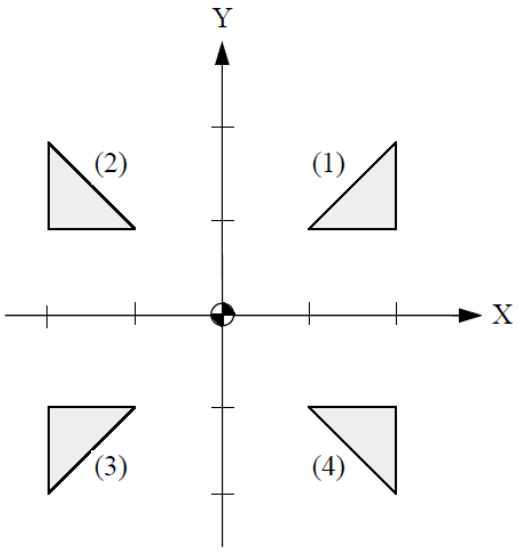

Local Coordinate System Setting (G52)

Use of the command：

By setting a local coorinate system instead of the original work coordinate system, complicate calculation can be simplified so that programming can be also easier. Besides, trouble due to lack amount of the work coorinate system (G54～G59) can get a solution.

Format：

G52 X__ Y__ Z__ ；
G52 X0 Y0 Z0 ； → Cancel
G50 ；

Meaning of command：

X, Y, Z：Offset values of the origin of the local coordinate system relative to the original work coordinate system (G54～G59).

Example：

```
O1000 ;
G80 G40 G49 G00 G17 ;
G91 G28 Z0 ;
G28 X0 Y0 ;
T1 ;
M6 ;
G90 G54 X0 Y0 ;
:
:
G90 G52 X200. Y100. ;
G90 G00 X0 Y0 ;
:
:
G90 G52 X0 Y0 ;
M30 ;
```

G90 G54 X0 Y0 ； → Tool moves to the origin of the work coordinate system in the program for the work piece A.

} Program for the work piece A.

G90 G52 X200. Y100. ； → The origin of the G54 coordinate system is shifted to the position (X200. Y100.).

G90 G00 X0 Y0 ； → Tool moves to the origin of the work coordinate system in the program for the work piece B.

} Program for the work piece B.

G90 G52 X0 Y0 ； → Cancel the origin offset in the program.

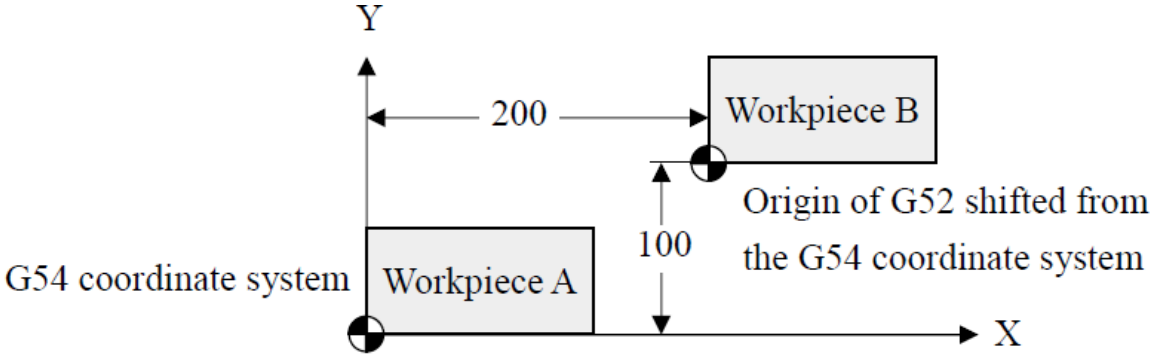

Note：G52 can be used only under the command of G54～G59.

Machine Coordinate System Selection (G53)

Use of the command：

When a specified position in the machine coordinate system will be moved to, the command G53 can be used directly and the inconvenience due to transference among G54, G92 and the machine coordinate can be avoided. This command must be combined with a command of movement such as G00.

Format：

G90 G00 G53 X__ Y__ Z__ ; or
G90 G01 G53 X__ Y__ Z__ F__ ;

Meaning of command：

X, Y, Z：The specified position in machine coordinate.

Example：

```
O1000 ;
G80 G40 G49 G00 G17 ;
G00 G90 G54 X0 Y0 ;
G53 X-200. Y-200. Z-100. ;
 :
M30 ;
```

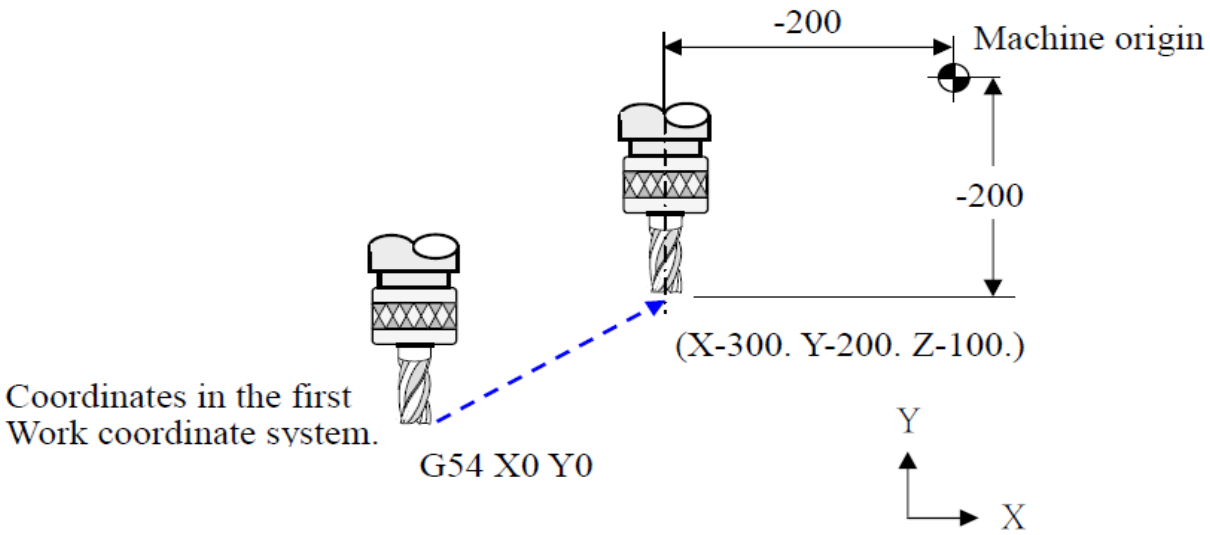

Note：(1) G53 is effective only under the absolute mode G90.
(2) G53 is a one-shot G code.

Workpiece Coordinate System Selection (G54～G59)

Use of the command：

It is used for setting a work origin (i.e. program origin). The setting values are the machine coordinates of the work origin. They are set in the OFFSET screen so as to get easier origin setting.

Format：

G90 G00 G54 X__ Y__ Z__ ;

Description on the format：

X, Y：The absolute coordinates in the work coordinate system, usually used together with commands G90 and G00.

Example：

O1000 ;

G80 G40 G49 G00 G17 ;

G90 G54 X0 Y0 ; → The offset values of the G54 work coordinate system are read at this moment.

:

M30 ;

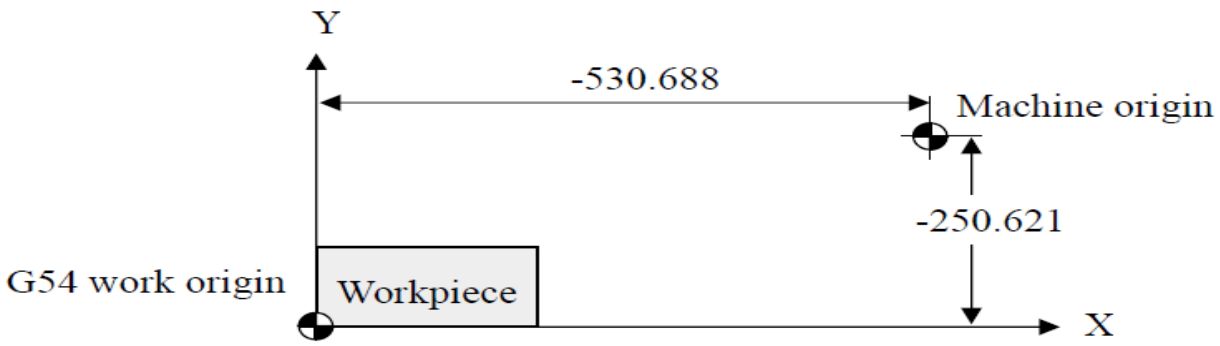

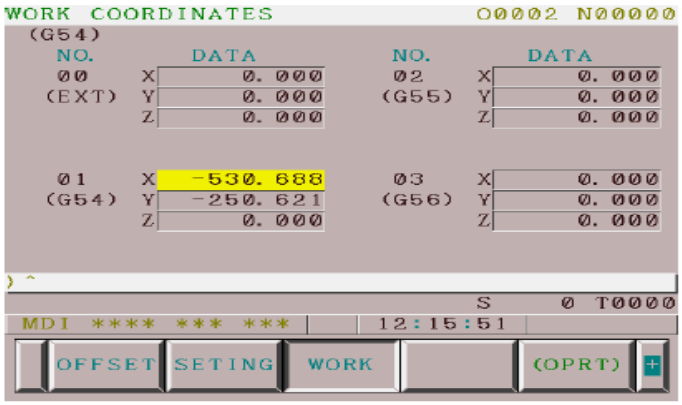

Additional Workpiece Coordinate System (G54.1 P1～P48～P300)

Format：

G90 G00 G54 P1 X__ Y__ Z__ ;

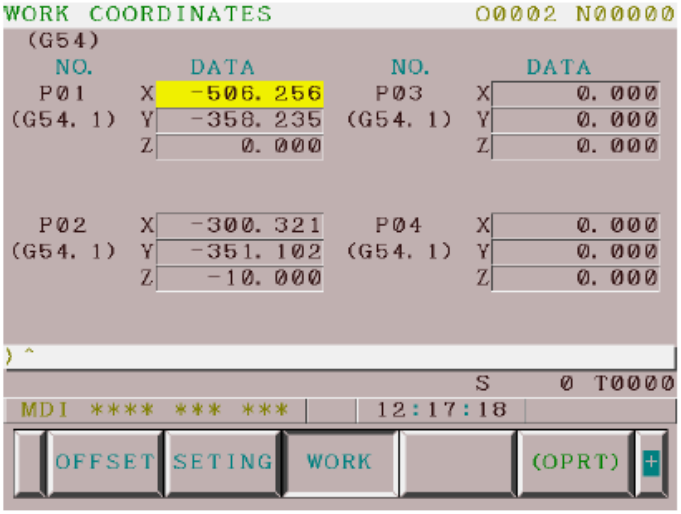

Parameter

No.	Meaning
1221	Workpiece coordinate system 1 (G54)
1222	Workpiece coordinate system 2 (G55)
1223	Workpiece coordinate system 3 (G56)
1224	Workpiece coordinate system 4 (G57)
1225	Workpiece coordinate system 5 (G58)
1226	Workpiece coordinate system 6 (G59)

Note：(1) Do not use the G92 absolute origin setting together for avoiding wrong action.

(2) Work coordinate system setting display：Press the function key [OFFSET SETTING], then press the soft key [WORK], 01 = G54, 02 = G55, etc.

Single Direction Positioning (G60)

Use of the command：

For the purpose of exact positioning without backlash compensation, this command restricts movement along the only direction for positioning to avoid backlash. This is a one-shot G code and effective only in the block with it. The movement is similar to the G00.

Format：

G60 X__ Y__ Z__ ；

Meaning of command：

X, Y, Z：Coordinates of the point with exact positioning.

Example：

```
O1000 ;
G80 G40 G49 G00 G17 ;
G60 G54 X0 Y0 ;
G43 Z10. H01 M3 S1200 ;
G76 Z-20. Q0.5 F100 ;
G80 ;
G49 G00 Z0 M5 ;
M30 ;
```

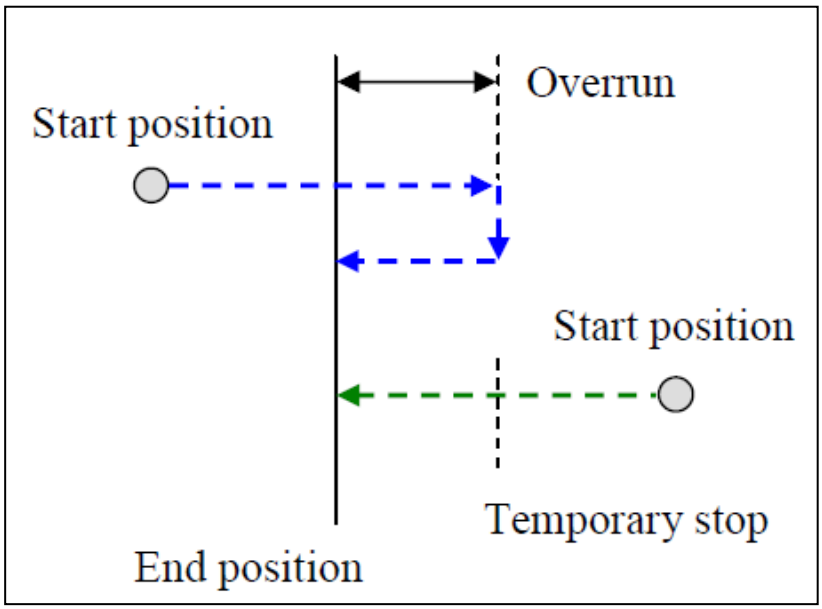

If the positioning direction is opposite to that for clearing backlash, the movement will pass the end point and return for positioning without backlash.

Parameter

No.	Meaning
5431 # 0	Single direction positioning is included in 0：One–shot G codes (00 group) 1：Modal G codes (01 group)
5440	Positioning direction and overrun distance in single direction positioning for each axis

Note：(1) During canned cycle for drilling, no single direction positioning is effective in Z axis.
(2) The single direction positioning is not applied to the shift motion in the canned cycles of G76 and G87.
(3) The direction set to the parameter is not effective in mirror image.

Exact Stop Mode (G61)

Use of the command:

It is used for confirming the positioning in the specified block completed (all machine movements have stopped). Then, the next action can be continued. Such a case is that a single block or a corner point for changing moving direction is required with high precision.This function after use is cancelled with G64.

Format：

G61；

Meaning of command：

G61：Command is given before blocks for the exact stopping positions.

Example：

```
O1000；
 :
G61；
G90 G54 G01 X0 Y0 F100；
X20. Y20.；
X60.；
Y60.；
X20.；
Y20.；
G64；
 :
M30；
```

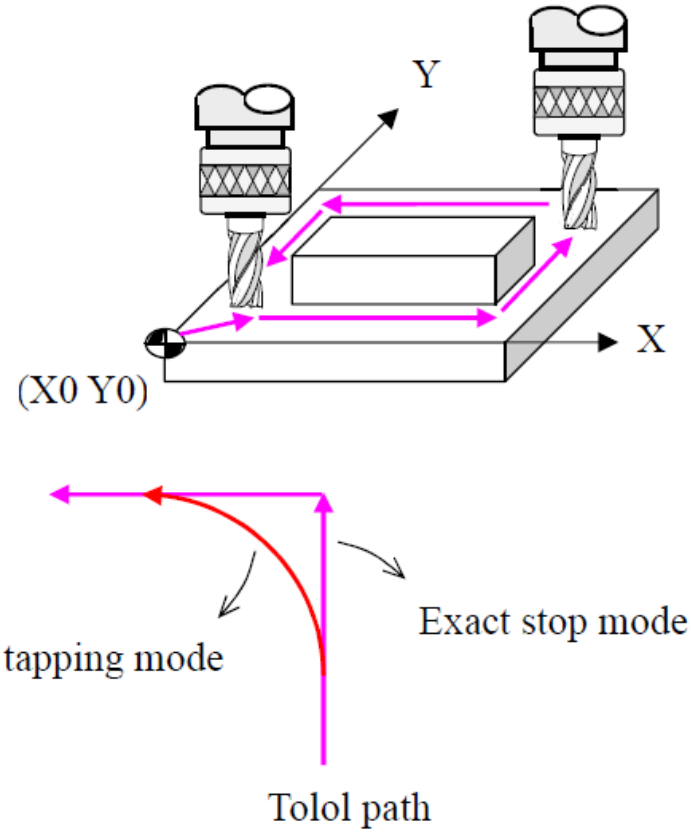

Note：Among the four commands of G61 exact stop mode／G62 automatic override for inner corners／G63 tapping mode／G64cutting mode, anyone can replace another.

Automatic Override for Inner Corners (G62)

Use of the command：

It is used for cutting at the inner corner to get better cutting effect such as surface roughness, accuracy and extend the tool life.

Format：

G62；

Meaning of command：

G62：Command directly. The relative information is set in parameter.

Example：

```
O1000；
 :
G62；
G01 X-100. Y0 F100；
X-100.Y100.  ；
 :
 :
M30；
```

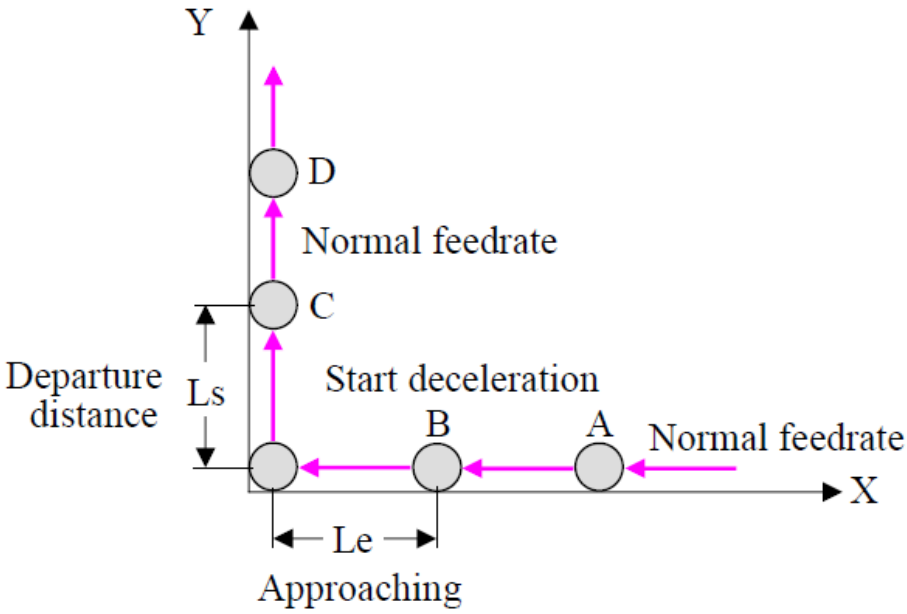

Parameter

No.	Meaning
1710	Minimum deceleration ratio of the inner circular cutting rate (mm／min)
1711	Angle used to recognize an inner corner (There is no deceleration when a cutting inner angle is bigger than this value.)
1712	Amount of override
1713	Distance Le from the starting point (Unit：0.1mm)
1714	Distance Ls up to the ending point (Unit：0.1mm)

Note：(1) Assume cutting is with feedrate F100 from point A to B and from C to D, and the percentage setting of the automatic override for inner corners is 50%. The cutting feedrate around the corner (from point B to C) will be F = 100 × 50 % = 50mm／min.

(2) If the angle of an inner corner is bigger than the set value, the function of the automatic override for inner corners will be not executed.

Tapping Mode (G63)

Use of the command：

During tapping mode, rotary switches of SPINDLE OVERRIDE %, FEDRATE OVERRIDE % and the button of FEEDHOLD are ineffective.

Format：

G63；

Example：

```
O1000；
G80 G40 G49 G00 G17；
 :
G63；
G84 Z-30. F300；
G80；
 :
M30；
```

Note：(1) The tappng is treated with program internally in this CNC controller so that the tapping mode G63 will be applied automatically during tapping process and return the cutting mode G64 after the tapping process. Thus, the G63 can be omitted.

(2) G63 is ineffective under the status of DRY RUN. Be sure to pay attention to this.

Coordinate System Rotation (G68／69)

Use of the command：

It is used to rotate the coordinate system in the program with some angle in advance so as to simplify programming.

Format：

G68 X__ Y__ R__ ；

G69 ；

Meaning of command：

G68：Coordinate System Rotation ON.

G69：Coordinate System Rotation OFF.

X, Y：The datum point of the rotated coordinate system.

R：Rotated angle.

Example：

O1000 ；

G80 G40 G49 G00 G17 ；

G00 G90 G54 X0 Y0 ；

G68 X0 Y0 R45. ；→ Rotate 45° based on the datum point X0 Y0.

：
：
} Cutting program

G69 ；→ Coordinate system rotation OFF

：

M30 ；

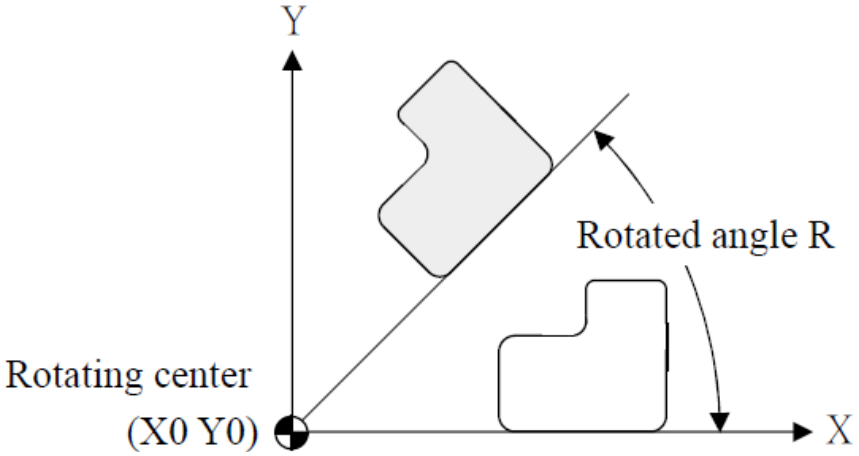

Parameter

No.	Meaning
5400 # 0	Coordinate rotation angle command (R) 0：Specified by an absolute method 1：Specified by an incremental method (G90 or G91)

Note：Commands G90／G91 are effective to the coordinates X_Y_ and ineffective to the R.

Canned Cycle (G73, G74, G76, G80～G89)

G Code	Drilling (–Z direction)	Operation at the bottom of a hole	Retraction (+Z direction)	Application
G73	Intermittent feed	—	Rapid traverse	High–speed peck drilling cycle
G74	Feed	Dwell → Spindle C.W	Feed	Left–hand tapping cycle
G76	Feed	Oriented spindle stop	Rapid traverse	Fine boring cycle
G80	—	—	—	Cancel
G81	Feed	—	Rapid traverse	Drilling cycle, spot drilling cycle
G82	Feed	Dwell	Rapid traverse	Drilling cycle, counter boring cycle
G83	Intermittent feed	—	Rapid traverse	Peck drilling cycle
G84	Feed	Dwell → Spindle C.C.W	Feed	Right–hand tapping cycle
G85	Feed	—	Feed	Boring cycle
G86	Feed	Spindle stop	Rapid traverse	Boring cycle
G87	Feed	Spindle C.W	Rapid traverse	Back boring cycle
G88	Feed	Dwell → Spindle stop	Manual	Boring cycle
G89	Feed	Dwell	Feed	Boring cycle

A canned cycle consists of six operations in sequence as follows.

Operation 1 : Positioning of axes X, Y and Z (Z axis at the initial point).

Operation 2 : Rapid traverse to the reference point R.

Operation 3 : Feed.

Operation 4 : Operation at the bottom of a hole.

Operation 5 : Retraction to the point R.

Operation 6 : Rapid traverse to the initial point.

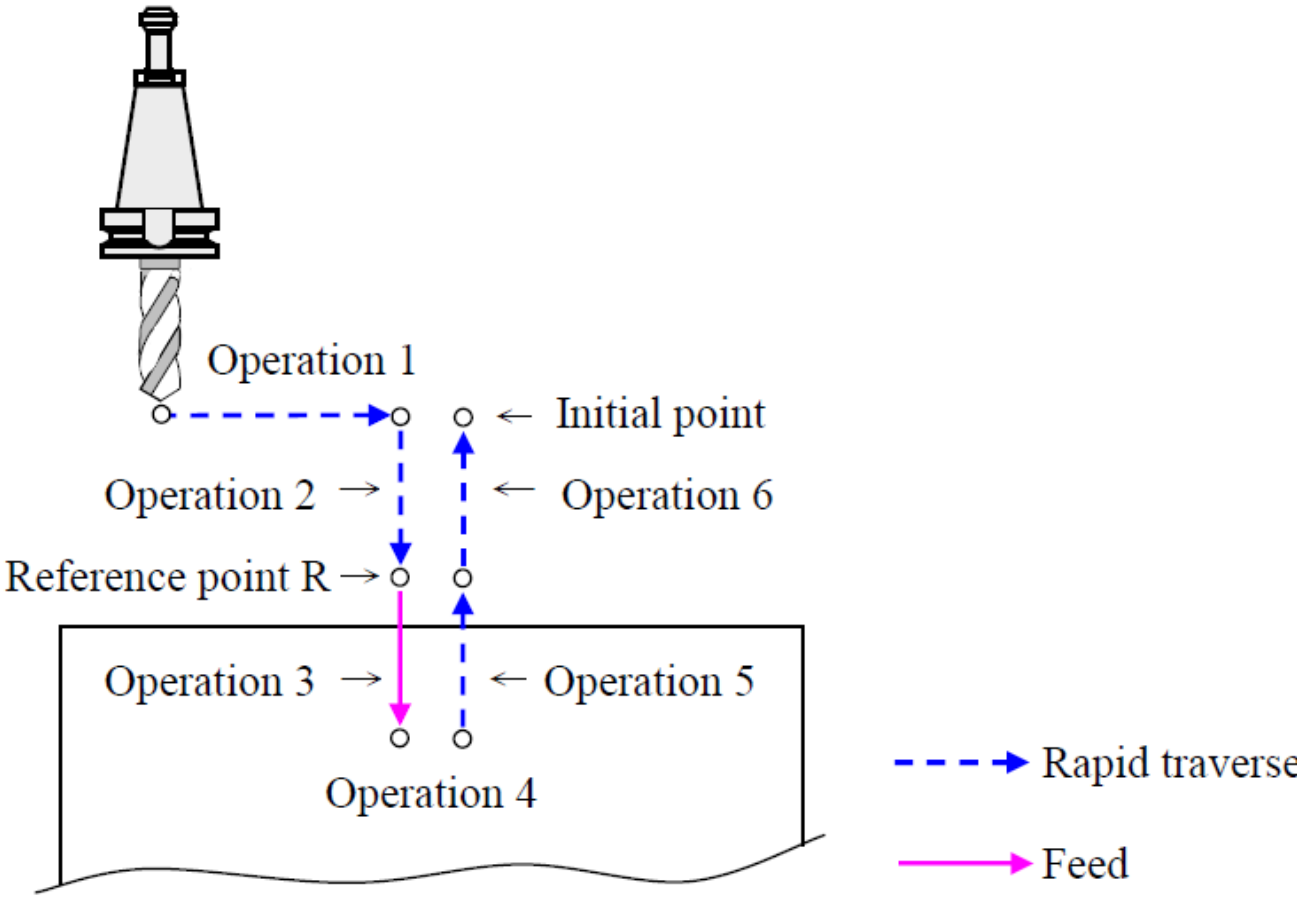

High Speed Peck Drilling Cycle (G73)

Use of the command：

It is used for deep drilling and a material of chips broken not easily. After work, use G80 to cancel this function.

Format：

(G98／G99) G73 X__ Y__ Z__ R__ Q__ F__ ；

Meaning of command：

X, Y：Coordinates of a position.
Z：Cutting depth
R：Height of the reference point.
Q：Cutting depth of each step.
F：Feedrate

Example：

```
O1000；
G80 G40 G49 G00 G17；
G90 G54 X25. Y25.；
G43 Z10. H01 M3 S1000；
G73 X50. Y50. Z-20. R5. Q6. F150；
G80；
 :
M30；
```

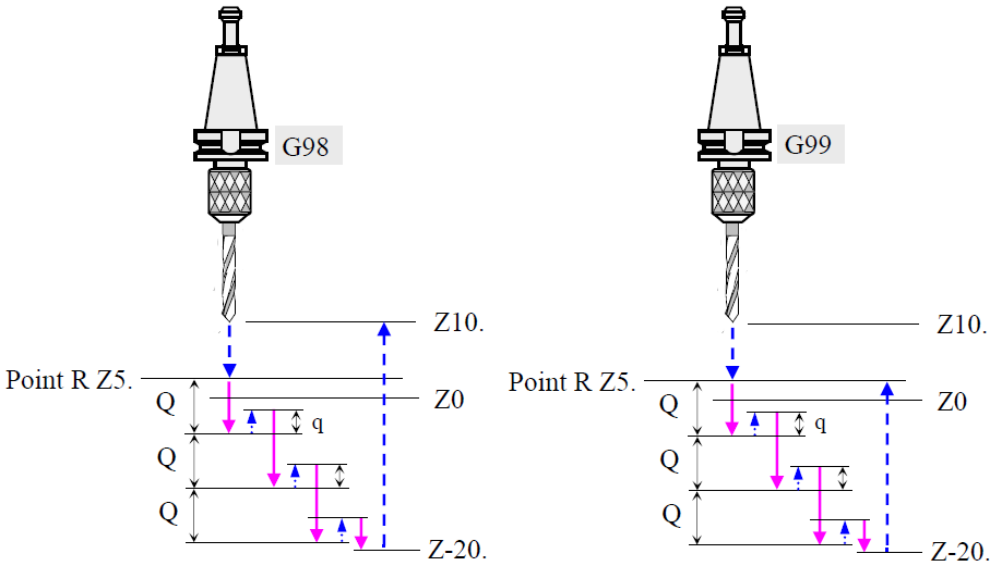

q：Returning height for each step

Parameter

No.	Meaning
5114	Return value of high speed peck drilling cycle (G73)

Note：(1) When clamping the tool in spindle, do spindle orientation M19 and then clamp the tool to the opposite direction that the tool is shifted at the hole bottom.

(2) The commands G90／G91 or G98／G99 can be used together.

(3) For the command G98／G99, please refer to the section of G98／G99 Retraction to the start point／reference point after cutting.

Counter Tapping Cycle (G74)

Use of the command：

It is used for tapping of left-hand thread. The tool will rotate with the opposite direction at the hole bottom automatically, and retracts out of the hole. After work, use G80 to cancel this function.

Format：

(G98／G99) G74 X__ Y__ Z__ R__ F__ ；

Meaning of command：

X, Y：Coordinates of a position
Z：Cutting depth
R：Height of the reference point
F：Feedrate

Example：

```
M10 × 1.5 P
O1000；
G80 G40 G49 G00 G17；
G90 G54 X25. Y25. ；
G43 Z10. H01 M4 S160；
G74 X50. Y50. Z-20. R5. F240；
G80；
 :
M30；
```

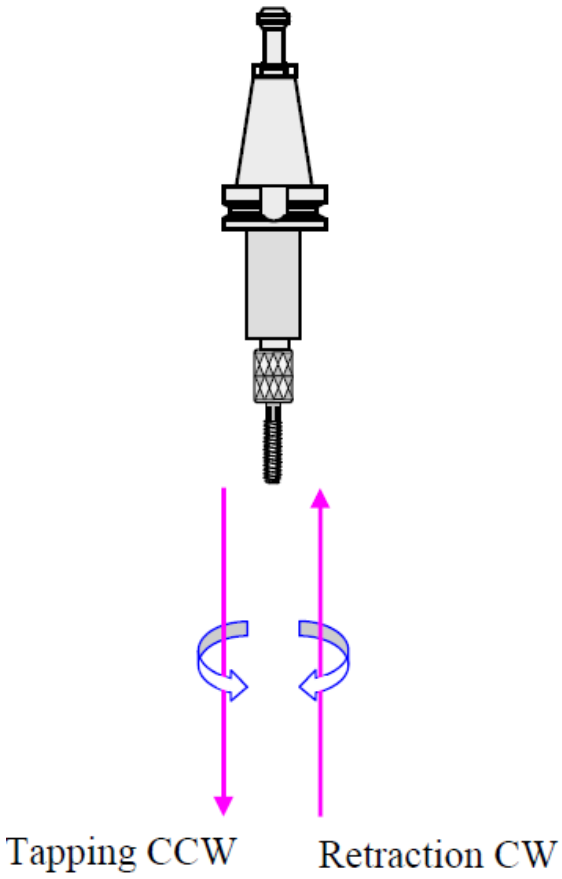

Note：(1) F (Feed) = P (Pitch) × S (Spindle speed)

EX：F = P × S =1.5 × 160 = 240 mm／min

If the above formula is not followed, the tool or workpiece could be damaged.

(2) When a tapping operation is needed during setting up a work, the function of DRY RUN has to be cancelled so as to avoid the tool or workpiece damaged.

(3) For the command G98／G99, please refer to the section of G98／G99 Retraction to the start point／reference point after cutting.

Fine Boring Cycle (G76)

Use of the command：

It is used for finish boring without hurting the finished surface. After work, use G80 to cancel this function.
(Pay attention to the direction of the boring bar mounted.)

Format：

(G98／G99) G76 X__ Y__ Z__ R__ Q__ F__ ；

Meaning of command：

X, Y：Coordinates of a position.
Z：Cutting depth.
R：Height of the reference point.
Q：Tool shifted distance at the hole bottom.
F：Feedrate

Example：

```
O1000；
G80 G40 G49 G00 G17；
G90 G54 X25. Y25. ；
G43 Z10. H01 M3 S1200；
G76 X50. Y50. Z-20. R5. Q0.5 F100；
G80；
 :
M30；
```

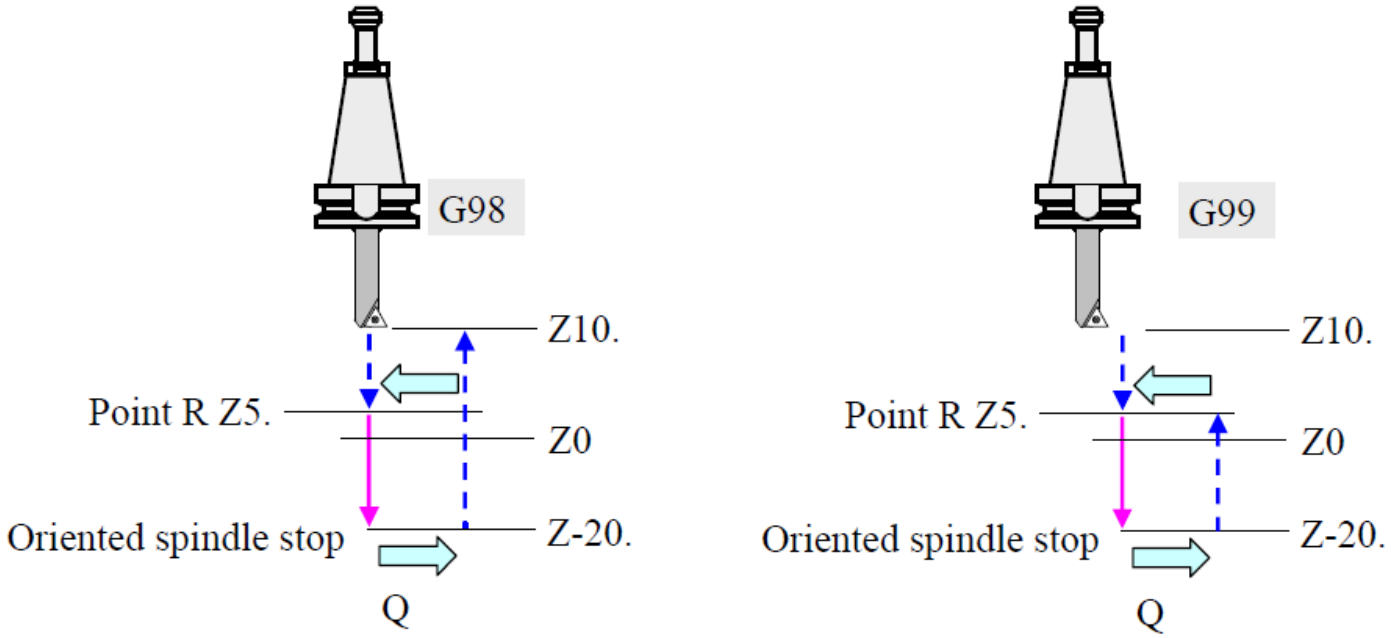

Q：Tool shifted amount.

Parameter

No.		Meaning		
5101 # 5	5101 # 4	G17	G18	G19
0	0	+X	+Z	+Y
0	1	−X	−Z	−Y
1	0	+Y	+X	+Z
1	1	−Y	−X	−Z

Note：(1) When clamping the tool in spindle, do spindle orientation M19 and then clamp the tool with the direction along the tool is shifted at the hole bottom.

(2) The command G90／G91 or G98／G99 can be used together.

(3) For the command G98／G99, please refer to the section of G98／G99 Retraction to the start point／reference point after cutting.

Drilling Cycle, Spot Boring Cycle (G81)

Use of the command：

It is used for drilling a center hole or a shallow hole. After work, use G80 to cancel this function.

Format：

(G98／G99) G81 X__ Y__ Z__ R__ F__ ；

Meaning of command：

X, Y：Coordinates of a position

Z：Cutting depth

R：Height of the reference point

F：Feedrate

Example：

```
O1000；
G80 G40 G49 G00 G17；
G90 G54 X25. Y25.；
G43 Z10. H01 M3 S1000；
G81 X50. Y50. Z-5. R5. F150；
G80；
 :
M30；
```

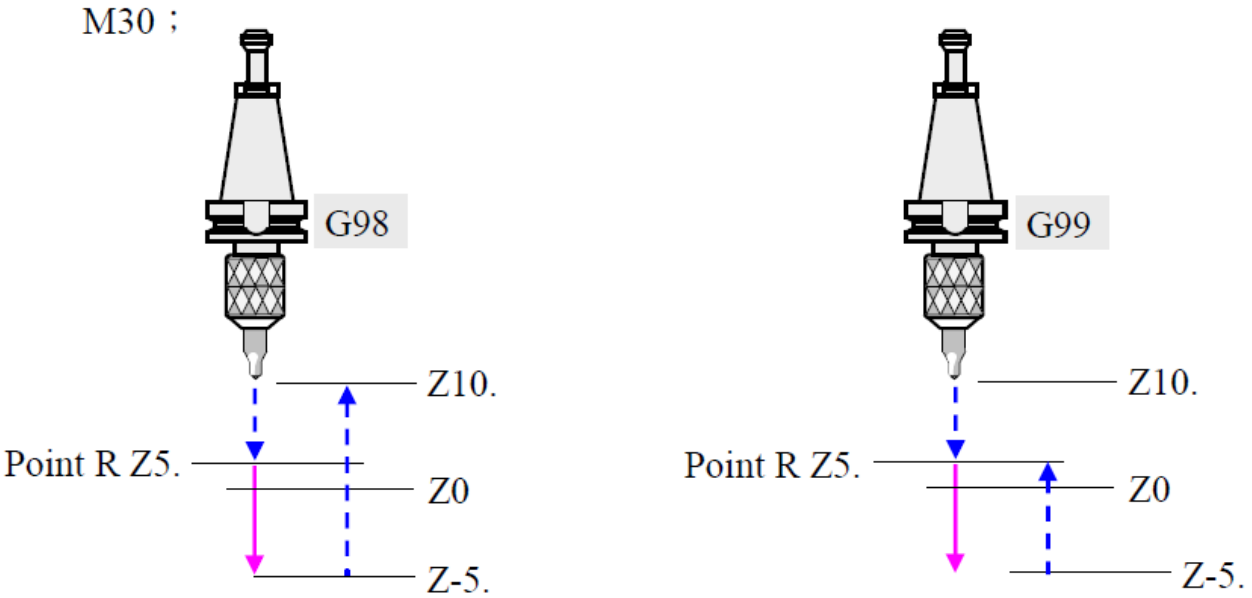

Note：(1) The G81 is a Modal G code. When drilling the first hole, the command G81 Z_F_has to be written. Thereafter, if the Z, F are kept the same, specifying the X, Y coordinates is needed only for the other holes.

(2) The command G90／G91 or G98／G99 can be used together.

(3) For the command G98／G99, please refer to the section of G98／G99 Retraction to the start point／reference point after cutting.

Drilling Cycle or Counter Boring Cycle (G82)

Use of the command：

It is used for cutting a counterbore or reaming. After work, use G80 to cancel this function.

Format：

(G98／G99) G82 X__ Y__ Z__ R__ P__F__ ；

Meaning of command：

X, Y：Coordinates of a position
Z：Cutting depth
R：Height of the reference point
P：Dwell time at the hole bottom (unit：0.001sec.)
F：Feedrate

Example：

Cutting a counterbore／countersink, dwell at the hole bottom for 0.5 seconds.

```
O1000；
G80 G40 G49 G00 G17；
G90 G54 X25. Y25. ；
G43 Z10. H01 M3 S1200；
G82 X50. Y50. Z-15. R5. P500 F100；
G80；
 :
M30；
```

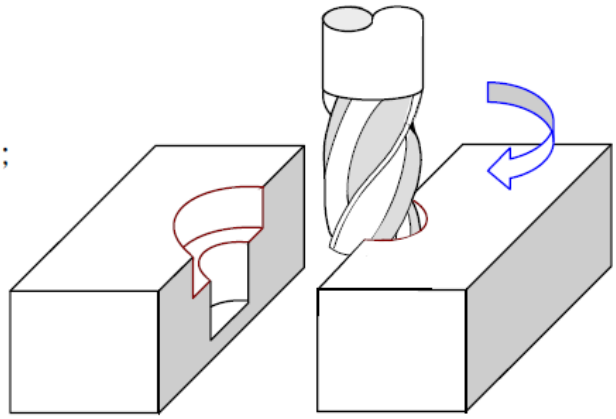

Dwell at the hole bottom for 0.5 seconds.

Note：(1) The G82 is a Modal G code. When drilling the first hole, the command G81 Z_F_ P_ has to be written. Thereafter, if the Z, F, and P are kept the same, specifying the X, Y coordinates is needed only for the other holes.
(2) The command G90／G91 or G98／G99 can be used together.
(3) For the command G98／G99, please refer to the section of G98／G99 Retraction to the start point／reference point after cutting.

Peck Drilling Cycle (G83)

Use of the command：

It is used for drilling a deep hole. It is better for lubrication and cooling so that it is suitable for cutting a material broken not easily. After work, use G80 to cancel this function.

Format：

(G98／G99) G83 X__ Y__ Z__ R__ Q__F__ ；

Meaning of command：

X, Y：Coordinates of a position
Z：Cutting depth
R：Height of the reference point
Q：Cutting depth of each step
F：Feedrate

Example：

```
O1000；
G80 G40 G49 G00 G17；
G90 G54 X25. Y25.；
G43 Z10. H01 M3 S1000；
98 G83 X50. Y50. Z-20. R5. Q6. F150；
G80；
 :
M30；
```

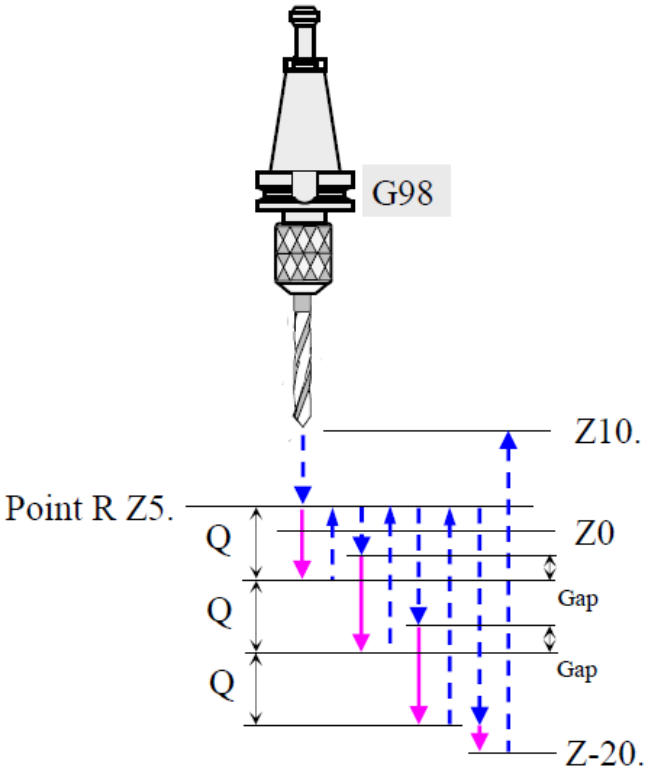

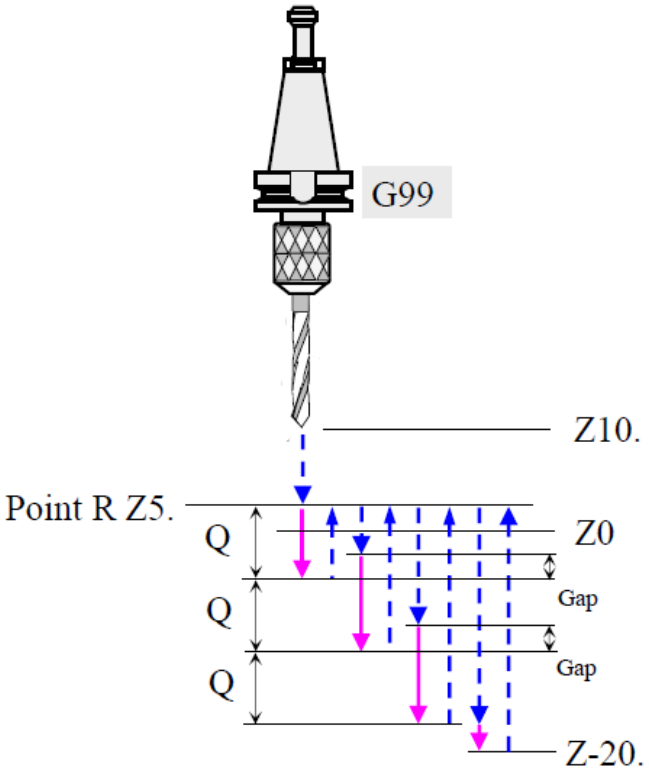

Parameter

No.	Meaning
5115	Clearance of canned cycle(G83)

Note：(1) This command cannot be used together with a command of Group 01 (such as G00, G01, G02 ….). Otherwise, this function will be ineffective.

(2) The command G90／G91 or G98／G99 can be used together.

(3) For the command G98／G99, please refer to the section of G98／G99 Retraction to the start point／reference point after cutting.

Tapping Cycle (G84)

Use of the command：

It is used for tapping of right-hand thread. The tool will rotate with the opposite direction at the hole bottom automatically, and retract out of the hole. After work, use G80 to cancel this function.

Format：

(G98／G99) G84 X__ Y__ Z__ R__ F__ ；

Description on the format:

X, Y：Coordinates of a position
Z：Cutting depth
R：Height of the reference point
F：Feedrate

Example：

```
M10 × 1.5 P
O1000；
G80 G40 G49 G00 G17；
G90 G54 X25. Y25.；
G43 Z10. H01 M3 S160；
G74 X50. Y50. Z-20. R5. F240；
G80；
 :
M30；
```

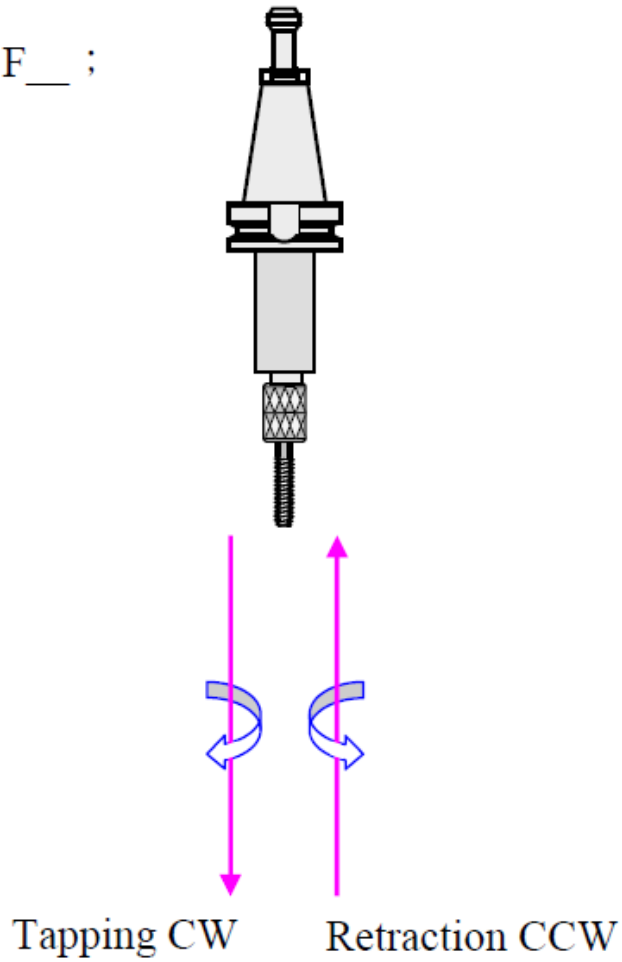

Note：(1) This command cannot be used together with a command of Group 01 (such as G00, G01, G02 ….). Otherwise, this function will be ineffective.

(2) This is a modal G code.

(3) F (Feed) = P (Pitch) × S (Spindle speed)

(4) When a tapping operation is done during setting up a work, the rotary switches of SPINDLE OVERRIDE % and FEEDRATE OVERRIDE % are ineffective.

(5) For the command G98／G99, please refer to the section of G98／G99 Retraction to the start point／reference point after cutting.

Boring Cycle (G85)

Use of the command：

It is used for rough boring or reaming. After work, use G80 to cancel this function.

Format：

(G98／G99) G85 X__ Y__ Z__ R__ F__ ；

Description on the format：

X, Y：Coordinates of a position
Z：Cutting depth
R：Height of the reference point
F：Feedrate

Example：

```
O1000 ;
G80 G40 G49 G00 G17 ;
G90 G54 X25. Y25.   ;
G43 Z10. H01 M3 S1000 ;
G85 X50. Y50. Z-20. R5. F150 ;
G80 ;
 :
M30 ;
```

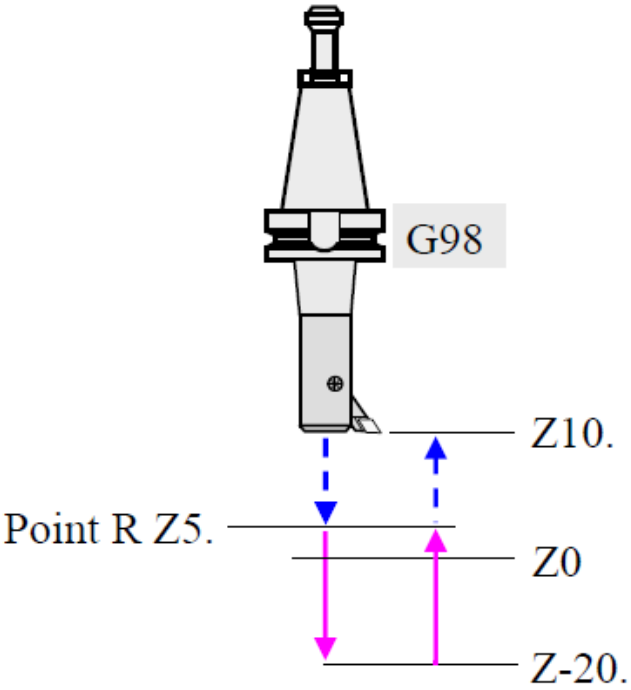

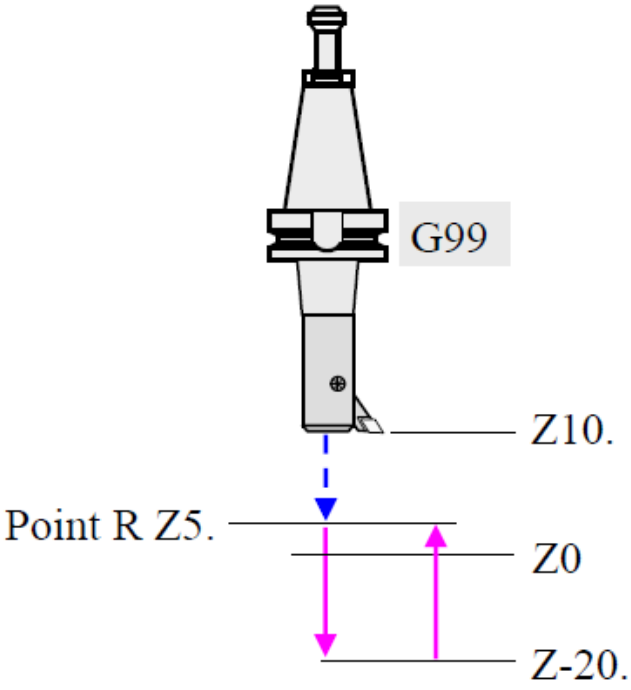

Note：(1) The spindle doesn't stop at the hole bottom and retracts out of the hole with the feedrate F.

(2) The command G90／G91 or G98／G99 can be used together.

(3) For the command G98／G99, please refer to the section of G98／G99 Retraction to the start point／reference point after cutting.

Boring Cycle (G86)

Use of the command：

It is used for rough boring or reaming. After work, use G80 to cancel this function.

Format：

(G98／G99) G86 X__ Y__ Z__ R__ F__ ；

Description on the format：

X, Y：Coordinates of a position

Z：Cutting depth

R：Height of the reference point

F：Feedrate

Example：

```
O1000；
G80 G40 G49 G00 G17；
G90 G54 X25. Y25.；
G43 G0 Z10. H01 M3 S1000；
G98 G86 X50. Y50. Z-20. R5. F150；
G80；
 :
M30；
```

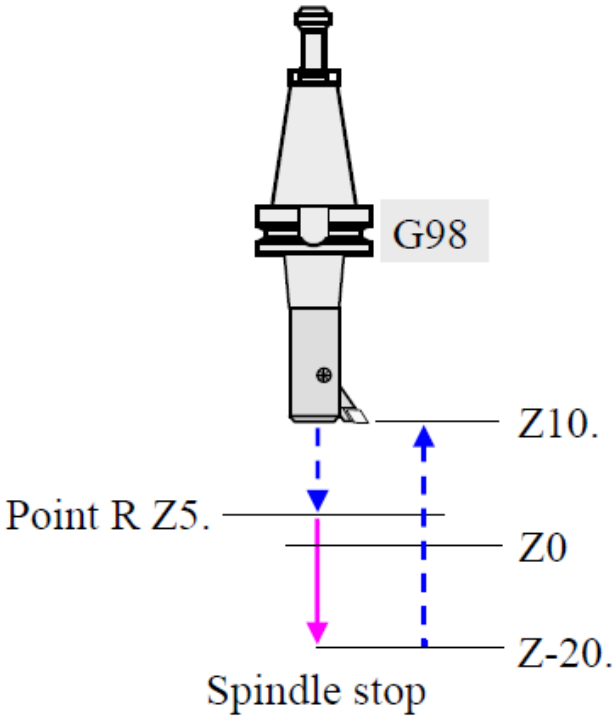

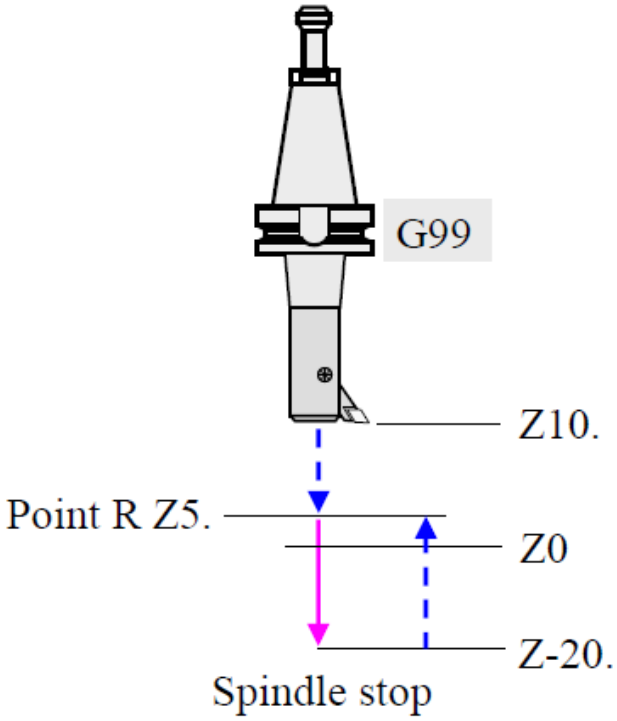

Note：(1) This command cannot be used together with a command of Group 01 (such as G00, G01, G02 ….). Otherwise, this function will be ineffective.

(2) The spindle stops and does orientation at the hole bottom. It retracts out of the hole with G00, and then rotates again.

(3) The command G90／G91 or G98／G99 can be used together.

(4) For the command G98／G99, please refer to the section of G98／G99 Retraction to the start point／reference point after cutting.

Back Boring Cycle (G87)

Use of the command：

It is used for boring from the back side. After work, use G80 to cancel this function. **(Pay attention to the direction of the boring bar mounted.)**

Format：

(G98) G87 X__ Y__ Z__ R__ Q__ F__ ；

Meaning of command：

X, Y：Coordinates of a position
Z：Cutting depth
R：Height of the reference point
Q：Tool shifted amount
F：Feedrate

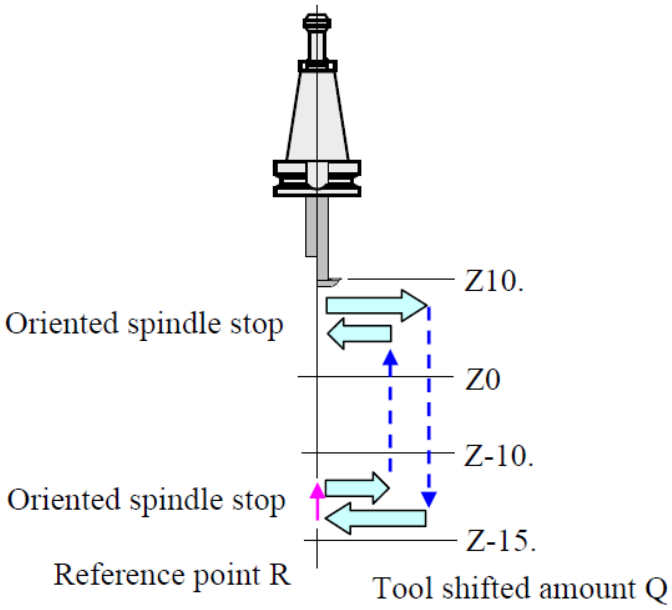

Example：

```
O1000；
G80 G40 G49 G00 G17；
G90 G54 X25. Y25.；
G43 Z10. H01 M3 S1000；
G87 X50. Y50. Z-10. R-15. Q1. F150；
G80；
 :
M30；
```

Parameter

No.		Meaning		
5101 # 5	5101 # 4	G17	G18	G19
0	0	+X	+Z	+Y
0	1	−X	−Z	−Y
1	0	+Y	+X	+Z
1	1	−Y	−X	−Z

Note：The operation of this code G87 is expalained as follows.

(1) When the tool is at the position Z10, spindle stops and does orientation. Then it shifts for 1 mm from the center position along the opposite direction of tool tip.

(2) Spindle moves down to the position Z-15. with G00 and shifts back to the center position.

(3) At this moment, spindle start rotation and bores from the back side to the position Z-10 with the feedrate F150.

(4) At the position Z-10, spindle stops and does orientation, shifts for 1mm from the center position again and then retracts to the position Z10 with G00.

(5) Spindle shifts back to the center point and start rotation again.

Boring Cycle (G88)

Use of the command：

It is used for boring with feed hold at the hole bottom. The tool retracts out of the hole by pressing the button CYCLE START. After work, use G80 to cancel this function.

Format：

(G98／G99) G88 X__ Y__ Z__ R__ F__ ；

Meaning of command：

X, Y：Coordinates of a position

Z：Cutting depth

R：Height of the reference point

F：Feedrate

Example：

```
O1000；
G80 G40 G49 G00 G17；
G90 G54 X25. Y25.；
G43 Z10. H01 M3 S1000；
G88 X50. Y50. Z-20. R5. F150；
G80；
 :
M30；
```

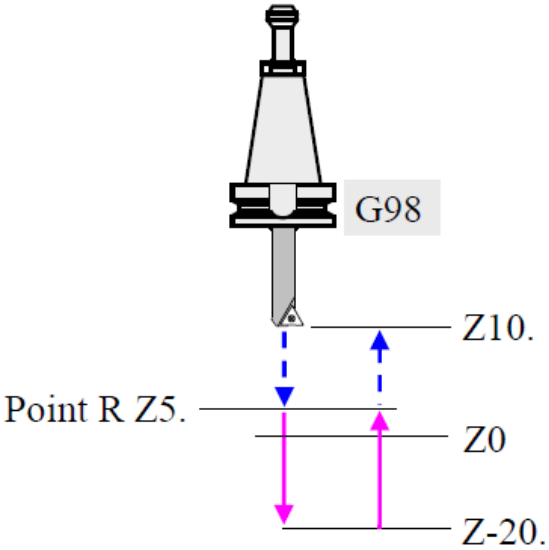

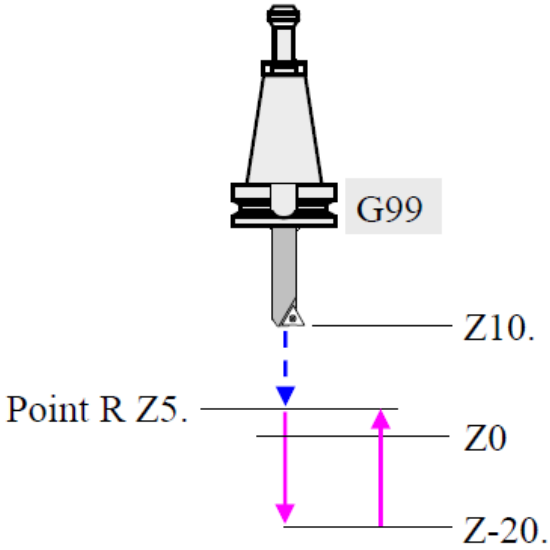

Feed hold at the hole bottom and spindle stops. The button CYCLE START must be pressed and then spindle rotates again and retracts out of the hole.

Boring Cycle (G89)

Use of the command：

It is used for boring with feed hold for a specified time at the hole bottom such as boring a blind hole. After work, use G80 to cancel this function.

Format：

(G98／G99) G88 X__ Y__ Z__ R__ P__ F__ ；

Meaning of command：

X, Y：Coordinates of a position
Z：Cutting depth
R：Height of the reference point
P：Feed hold time at hole bottom (unit：0.001sec.)
F：Feedrate

Example：

```
O1000；
G80 G40 G49 G00 G17；
G90 G54 X25. Y25.；
G43 Z10. H01 M3 S1000；
G89 X50. Y50. Z-20. R5. P1000 F150；
G80；
 :
M30；
```

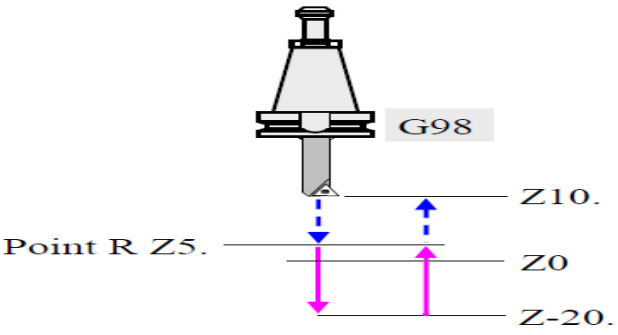

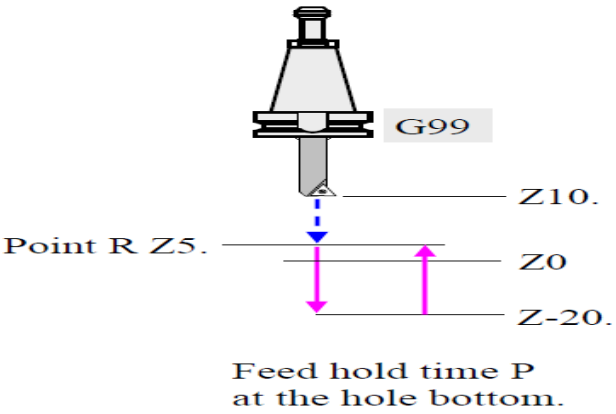

Absolute and Increment Command (G90／G91)

Use of the command：

They are used for specifying the calculation and executioin about commands of position and angle with absolute type (relative to the work origin) or incremental type (relative to the current position).

Format：

G90；

G91；

Meaning of command：

G90：Absolute mode.

G91：Incremental mode.

G90／G91 can be used single or together with other commands in a block.

Example：

(G90 Absolute mode)

O1000；

G90 G00 X0 Y0；→ Start from the work origin

X50. Y0；

X50. Y50.；

X100. Y100.；

M30；

Or

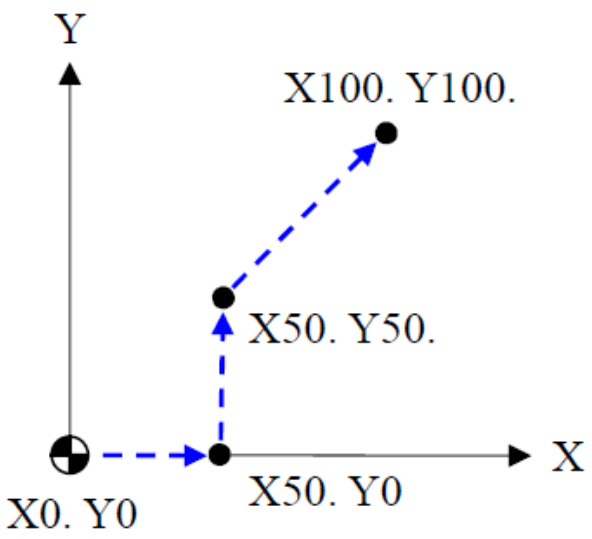

(G91 Incremental mode)

O2000；

G91 G00 X50. Y0；→ Start from the work

X0 Y50.；

X50. Y50.；

M30；

Hint：Look the current position as the work origin at this moment.

Note：(1) The above two examples are the same work paths. The comparison to each other is the difference of the path programming.

(2) G90／G91 are both modal G codes.

(3) Usually, the G90 is used in the main program and G91 in the subprogram. However, there are still some exceptions. The major principle of such code selection is to simplify programming.

Setting for Work Coordinate System (G92)

Use of the command：

This command is similar to the G54～G59 (work coordinate system) and used for setting a work origin. In the program, the G92 can't be used with any of G54～G59 together. Otherwise, the coordinate system will be shifted away.

Format：

G90 G92 X__ Y__ Z__ ;

Meaning of command：

X, Y, Z：Set the current position as the absolute coordinates specified with the X, Y, Z values.

Example：

(1)

O1000 ;

G80 G40 G49 G00 G17 ;

G91 G28 Z0 ;

G28 X0 Y0 ; → At the machine origin

G91 G00 X-321. Y-123. ; → Set the work origin at this moment.

G90 G92 X0 Y0 ;

:

M30 ;

Note：After the tool returns the machine origin, it moves with incremental type to the position (X-321., Y-123.). Then, set that position as the origin of the absolute coordinate system. This is the work origin.

(2)

O2000；

G80 G40 G49 G00 G17；

G91 G28 Z0；

G28 X0 Y0；→ At the machine origin

G90 G92 X321. Y123.；→ Set the work origin at this moment.

：

M30；

Note：When the tool returns the machine origin, and this position is the (X321., Y123.) in the absolute coordinate system. Then, the work origin can be confirmed.

Return to Initial Point or R Point in Canned Cycle (G98／G99)

Use of the command：

It is used for assisting the command of drilling cycle.

Format：

G98／G99 R__；

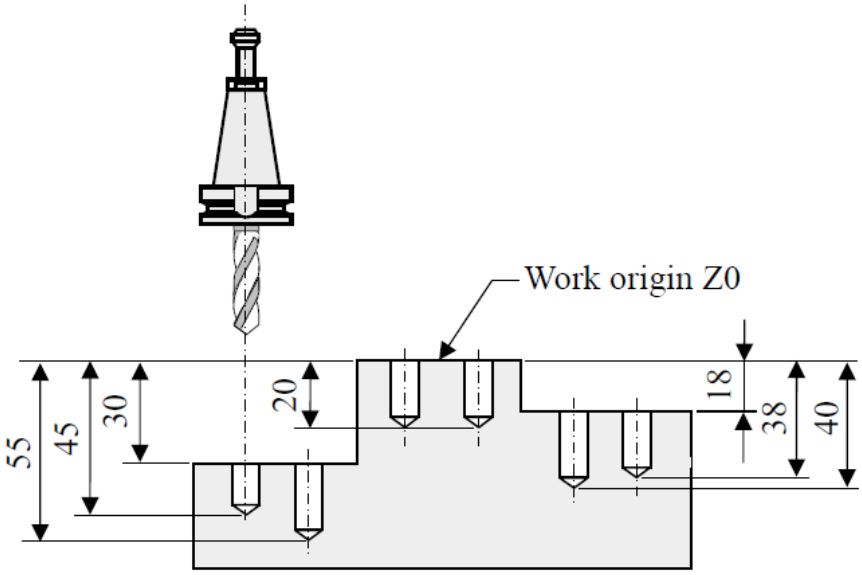

Example：

```
O1000；
G80 G40 G49 G00 G17；
G90 G54 X18. Y20.；
G43 Z5. H01 M3 S800；
G99 G81 Z-45. R-28. F120；
G98 X35. R2. Z-55.；
G99 X62. Z-20.；
X84.；
X114. R-16. Z-40.；
X132. Z-38.；
G80；
G91 G0 G28 Z0 M5；
M30；
```

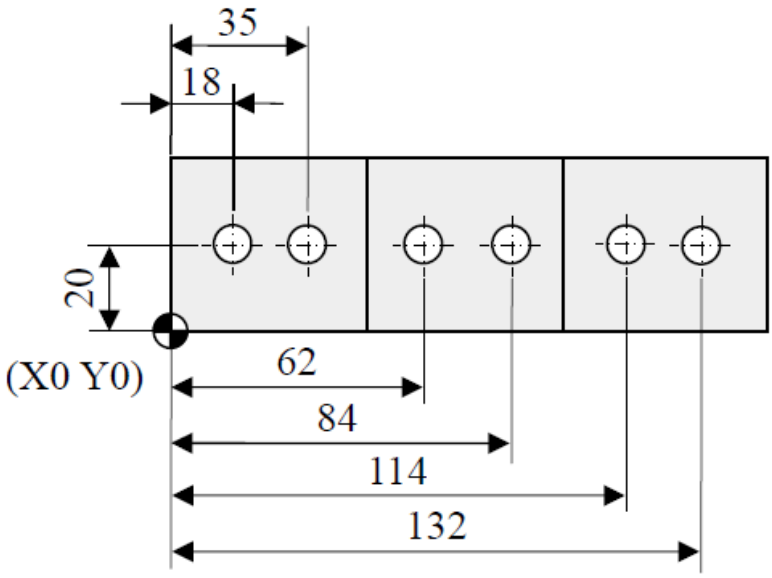

Note：(1) No matter which is G98／G99, tool must move rapidly to the reference point and then executing cutting. The returning height after cutting is decided by the G98／G99.

(2) Regarding the starting height, it is the last position just before the drilling cycle executed, e.g., the Z5. in the above example.

Chapter 5

PROGRAM INPUT / OUT OPERATION

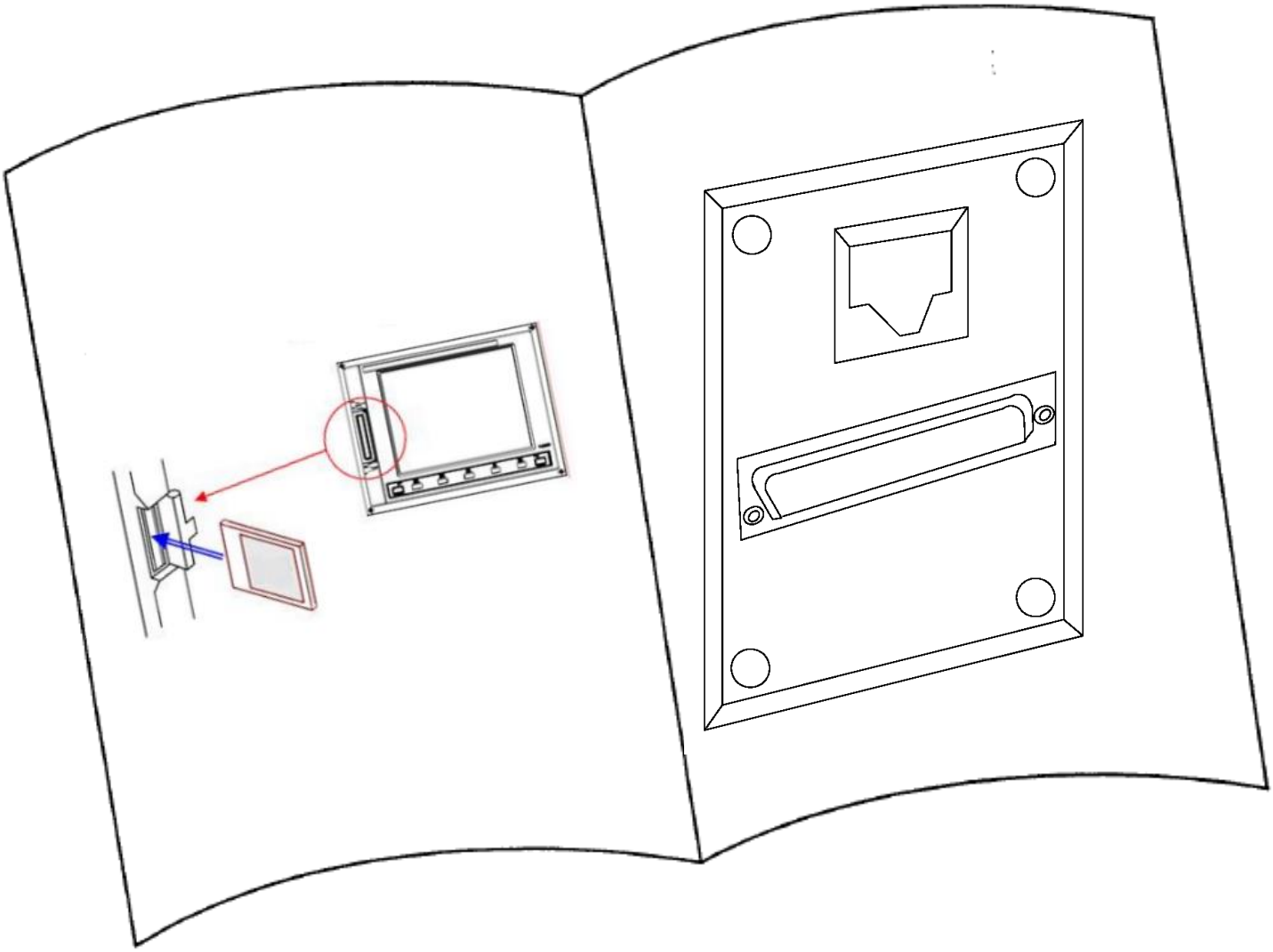

1. Memory Card Operation

NC data (ex. program, offset data, workpiece coordinate system data, etc.) can be read into the CNC from a Memory Card (upload) and written from the CNC to the Memory Card download).

It is necessary to set the I／O channel (the parameter No.20) as 4 on setting screen.

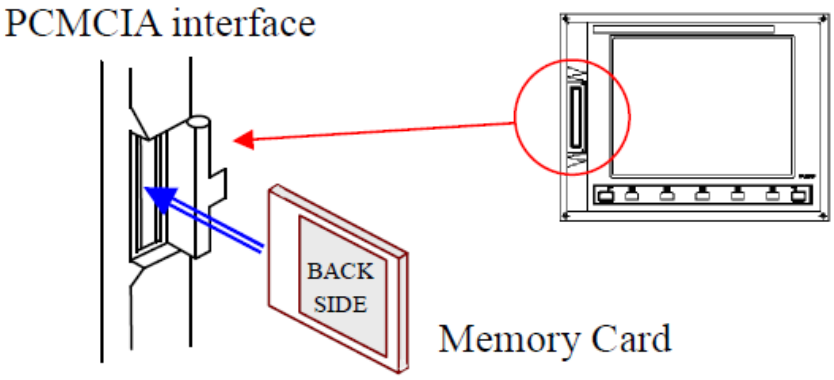

1.1 Displaying the Directory

1.Under the EDIT moder, press the function key

.

2.Press the soft key FOLDER

3.Press the soft key (OPRT)

4.Press the soft key DEVICECHANGE

5.Press the soft key M-CARD

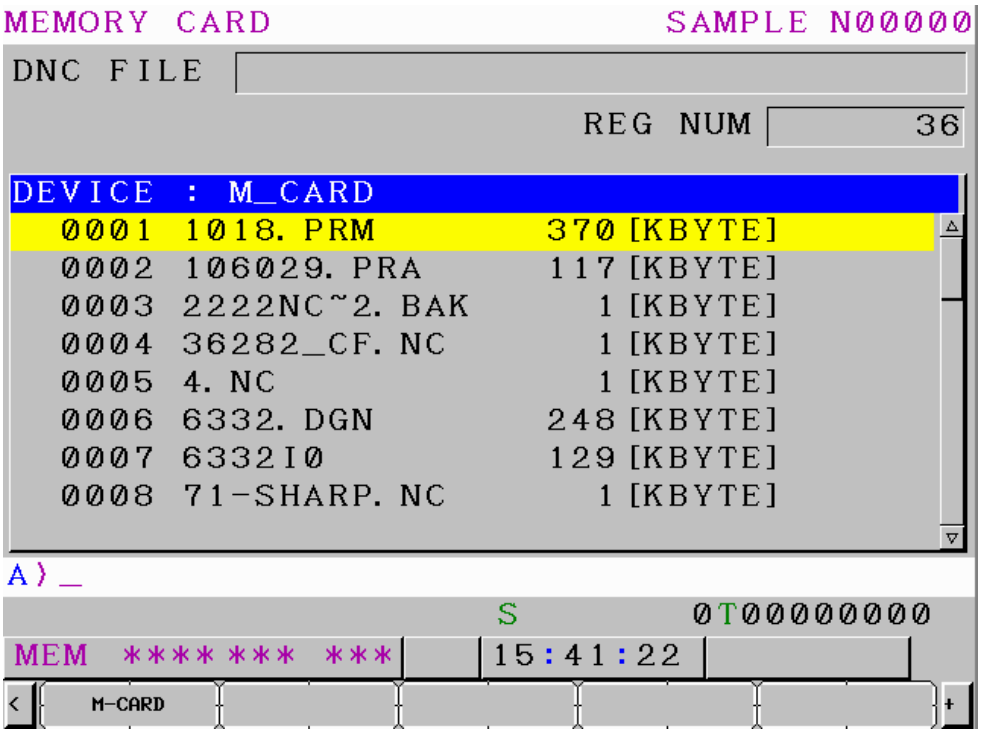

1.2 Searching for a File

1.Under the EDIT moder, press the function key PROG

2.Press the soft key FOLDER

3.Press the soft key (OPRT)

4.Press the soft key DEVICECHANGE

5.Press the soft key M-CARD

6.Press the soft key ►

7.Press the soft key F INPUT and F OUTPUT

8.Press the soft key ►

9.Press the soft key F GET

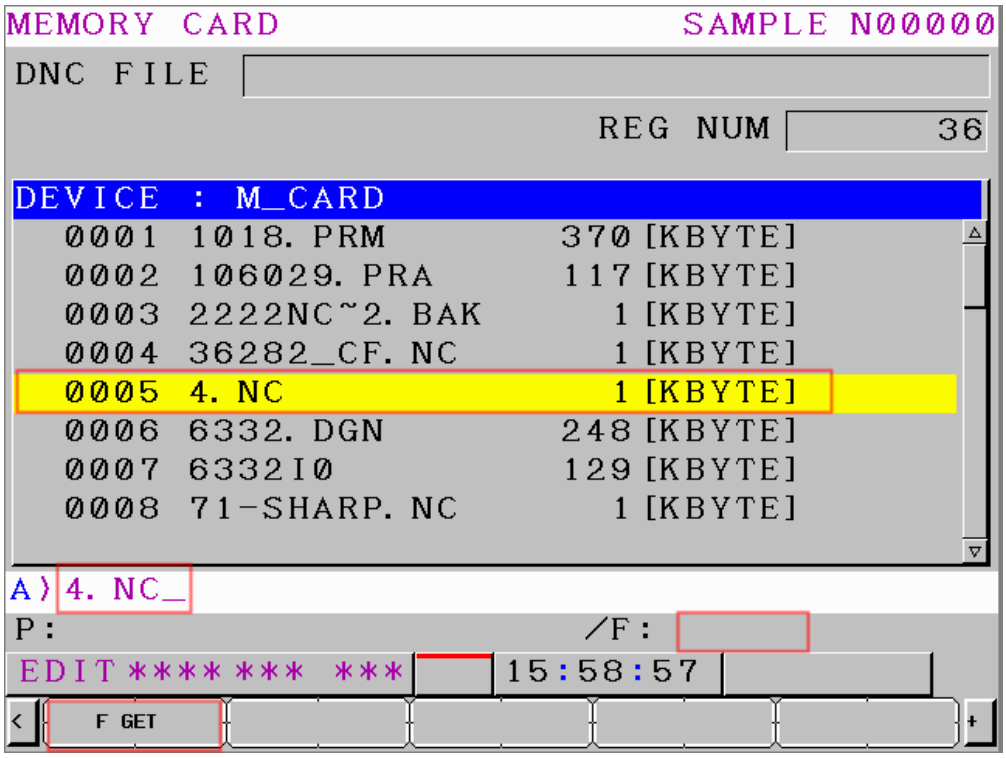

10.Press the soft key [F SET]

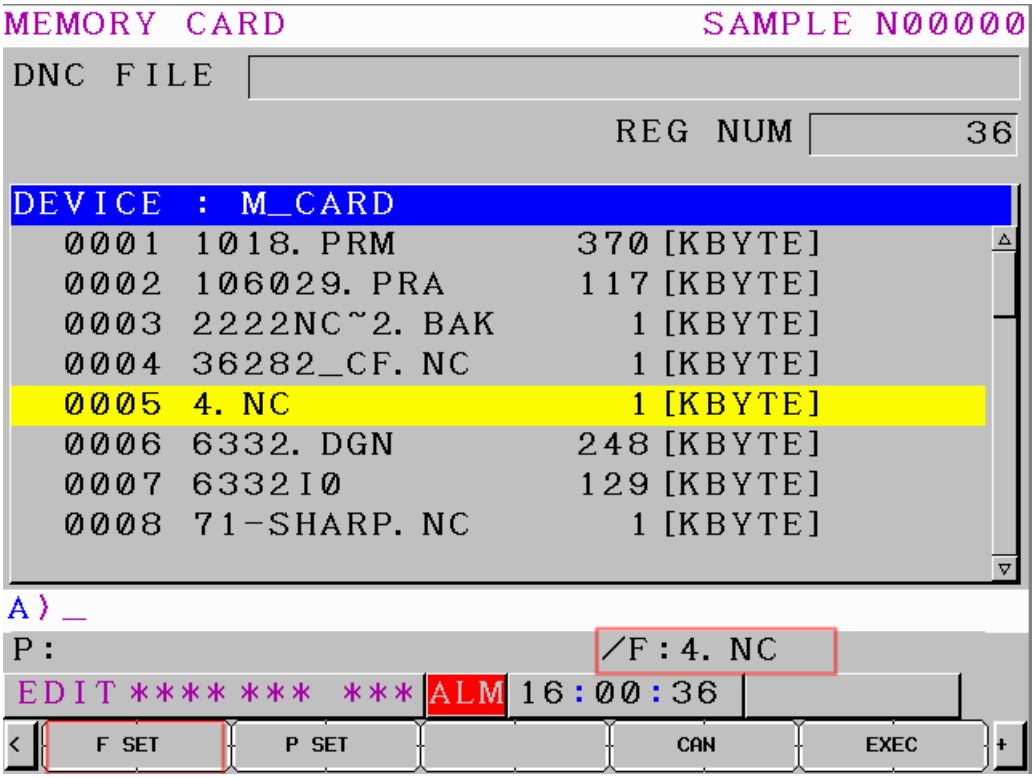

11.Press the soft key [EXEC]

1.3 Deleting a File

1.Under the EDIT moder, press the function key [PROG]

2.Press the soft key [FOLDER]

3.Press the soft key [(OPRT)]

4.Press the soft key [DEVICECHANGE]

5.Press the soft key [M-CARD]

6.Press the soft key [►]

7.Press the soft key DELETE

14 DNC Operation

DNC operation with Memory Card is a function which is possible to perform machining with executing the program in the Memory Card.

It is necessary to set the parameter No.138 # 7 (the function of DNC operation with Memory Card) as 1 on setting screen.

1 Searching for a File

1.Under the REMOTE moder, press the function key PROG

2.Press the soft key FOLDER

3.Press the soft key (OPRT)

4.Press the soft key DEVICECHANGE

5.Press the soft key M-CARD

6.Press the soft key ►

7.Press the soft key DNC SET

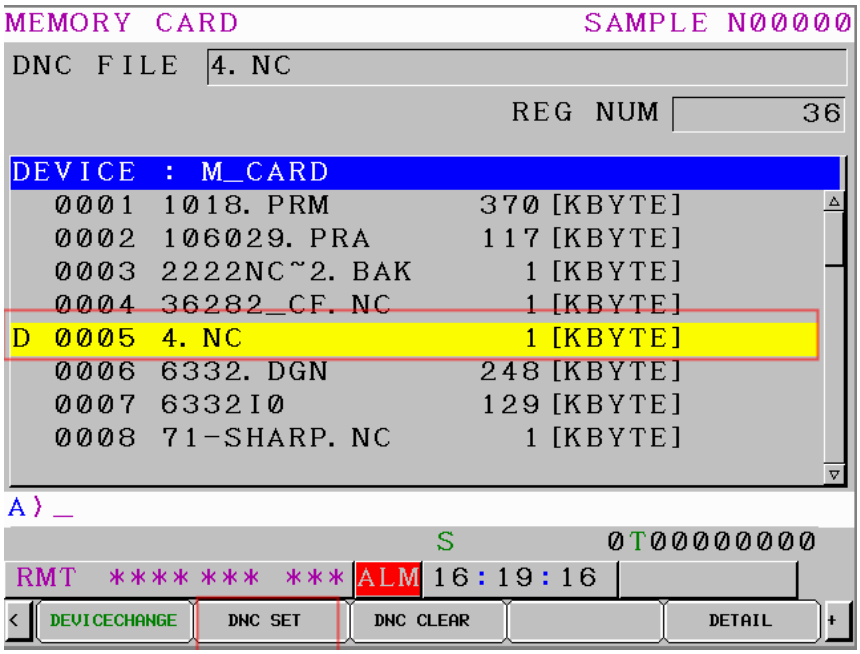

8 . Press the button CYCLE START on the machine operating panel.

2. DATA INPUT／OUTPUT ON THE ALL IO SCREEN (USING MEMORY CARD)

It is necessary to operate under the EDIT mode and to set the I／O channel (the parameter No.20) as 4 on setting screen.

Chapter 6

Cutting Tool Condition List

1. Cutting Tools Use Description

The following tables are just for use of general cutting. If a tool or work piece with special material is used, please follow the data offered by the supplier.

1.1 FACE MILL

Face Mill								
Face Mill of Tungsten Carbide								
Steel								
	Rough milling				Finish milling			
D	S	V	F	fz	S	V	F	fz
mm	rpm	M / min	mm / min	mm / tooth	rpm	M / min	mm / min	mm / tooth
75	335	83	285	0.2	500	117	160	0.08
100	250	79	300	0.2	335	111	180	0.08
125	200	80	315	0.2	280	109	192	0.08
150	180	85	340	0.2	250	117	200	0.08

Cast iron								
	Rough milling				Finish milling			
D	S	V	F	fz	S	V	F	fz
mm	rpm	M / min	mm / min	mm / tooth	rpm	M / min	mm / min	mm / tooth
75	315	74	252	0.2	450	106	180	0.1
100	224	70	270	0.2	315	99	189	0.1
125	180	71	288	0.2	250	100	250	0.1
150	160	75	320	0.2	224	106	224	0.1

Aluminum								
	Rough milling				Finish milling			
D	S	V	F	fz	S	V	F	fz
mm	rpm	M / min	mm / min	mm / tooth	rpm	M / min	mm / min	mm / tooth
75	1400	330	1050	0.25	1800	424	540	0.1
100	1000	314	1000	0.25	1400	442	560	0.1
125	800	314	1000	0.25	1120	442	560	0.1
150	710	300	1065	0.25	900	424	540	0.1

1.2 END MILL

End Mill										
End Mill of H.S.S.										
Steel										
	Rough milling					Finish milling				
D	S	V	F	fz	t	S	V	F	fz	t
Mm	rpm	M / min	mm / min	mm / tooth	tooth	rpm	M / min	mm / min	mm / tooth	tooth
5	1400	23	84	0.03	2	1600	25	192	0.03	4
8	900	23	90	0.05	2	1000	25	160	0.04	4
10	710	22	85	0.06	2	800	25	128	0.04	4
15	450	21	63	0.07	2	560	26	112	0.05	4
20	335	22	50	0.07	2	400	25	96	0.06	4
30	224	21	31	0.07	2	280	26	67	0.06	4
40	180	23	25	0.07	2	200	25	48	0.06	4

Cast iron										
	Rough milling					Finish milling				
D	S	V	F	fz	t	S	V	F	fz	t
Mm	rpm	M / min	mm / min	mm / tooth	tooth	rpm	M / min	mm / min	mm / tooth	tooth
5	1600	25	192	0.06	2	1800	28	216	0.03	4
8	1000	25	140	0.07	2	1250	31	200	0.04	4
10	800	25	128	0.08	2	1000	31	200	0.05	4
15	560	26	112	0.1	2	630	30	126	0.05	4
20	400	25	80	0.1	2	500	31	120	0.06	4
30	280	26	56	0.1	2	315	30	76	0.06	4
40	200	25	44	0.11	2	250	31	60	0.06	4

Aluminum										
	Rough milling					Finish milling				
D	S	V	F	fz	t	S	V	F	fz	t
Mm	rpm	M / min	mm / min	mm / tooth	tooth	rpm	M / min	mm / min	mm / tooth	tooth
5	3150	49	315	0.05	2	3150	49	189	0.03	2
8	2240	56	268	0.06	2	2800	70	168	0.03	2
10	1800	56	252	0.07	2	2240	70	134	0.03	2
15	1250	59	225	0.09	2	1600	75	128	0.04	2
20	1000	63	200	0.1	2	1250	79	125	0.05	2
30	630	59	126	0.1	2	800	75	80	0.05	2
40	500	63	100	0.1	2	630	79	63	0.05	2

1.3 BORING BAR

Boring Bar								
Boring Bar of Tungsten Carbide								
Cast iron								
	Rough boring				Finish boring			
D	S	V	F	fz	S	V	F	fz
mm	rpm	M / min	mm / min	mm / tooth	rpm	M / min	mm / min	mm / tooth
15	1600	75	160	0.1	2000	95	120	0.06
20	1120	70	112	0.1	1600	100	96	0.06
30	800	75	95	0.13	1000	95	70	0.07
40	560	70	73	0.13	800	100	56	0.07
50	450	71	59	0.13	630	99	44	0.07
60	400	75	56	0.16	500	95	40	0.08
80	280	70	45	0.16	400	100	32	0.08
100	224	71	36	0.16	315	99	25	0.08
120	200	75	40	0.2	250	95	25	0.1
150	160	75	32	0.2	200	94	20	0.1
200	112	71	22	0.2	160	100	16	0.1

Aluminum								
	Rough boring				Finish boring			
D	S	V	F	fz	S	V	F	fz
Mm	rpm	M / min	mm / min	mm / tooth	rpm	M / min	mm / min	mm / tooth
15	3150	148	315	0.1	3150	148	189	0.06
20	2240	152	224	0.1	2800	176	168	0.06
30	1600	150	192	0.12	1800	170	108	0.06
40	1120	141	134	0.12	1400	176	84	0.06
50	900	141	125	0.14	1120	176	67	0.06
60	800	150	112	0.14	900	170	63	0.07
80	560	141	90	0.16	710	178	50	0.07
100	450	141	72	0.16	560	176	39	0.07
120	400	150	72	0.18	450	170	36	0.08
150	315	148	58	0.18	400	188	32	0.08
200	224	141	36	0.18	280	176	22	0.08

1.4 DRILL

Drill								
Drill of H.S.S.								
	Steel				Cast iron			
D	S	V	F	fr	S	V	F	fr
mm	rpm	M / min	mm / min	mm / rev	rpm	M / min	mm / min	mm / rev
2	3150	20	126	0.02	3150	20	189	0.03
3	2500	24	125	0.025	2500	24	200	0.04
4	2000	25	120	0.03	2000	25	200	0.05
5	1600	25	128	0.04	1600	25	192	0.06
6	1250	24	125	0.05	1400	24	224	0.08
8	1000	25	120	0.06	1000	25	200	0.1
10	800	25	128	0.08	800	25	192	0.12
12	630	24	113	0.09	630	24	151	0.12
14	560	25	112	0.1	560	25	146	0.13
16	500	25	110	0.11	500	25	150	0.15
18	450	25	108	0.12	450	25	153	0.17
20	400	25	100	0.125	400	25	160	0.2
25	315	25	95	0.15	315	25	126	0.2
30	280	26	84	0.15	280	26	112	0.2
35	224	25	67	0.15	224	25	90	0.2
40	200	25	60	0.15	200	25	80	0.2
45	180	25	54	0.15	180	25	72	0.2
50	160	25	48	0.15	160	25	64	0.2

Aluminum									
D	S	V	F	fr	D	S	V	F	fr
Mm	rpm	M / min	mm / min	mm / rev	mm	rpm	M / min	mm / min	mm / rev
2	3150	20	189	0.03	16	1600	80	384	0.12
3	3150	30	252	0.04	18	1400	79	392	0.14
4	3150	40	315	0.05	20	1250	79	400	0.16
5	3150	52	315	0.05	25	1000	79	400	0.2
6	3150	59	378	0.06	30	800	75	320	0.2
8	2800	70	448	0.08	35	710	78	284	0.2
10	2500	79	500	0.1	40	630	79	252	0.2
12	2000	75	400	0.1	45	56	80	224	0.2
14	1800	79	396	0.11	50	500	79	200	0.2

1.5 REAMER

Reamer								
Reamer of H.S.S.								
	Steel				Cast iron			
D	S	V	F	fr	S	V	F	fr
mm	rpm	M / min	mm / min	mm / rev	rpm	M / min	mm / min	mm / rev
5	250	4	0.3	0.3	355	5.6	178	0.5
10	125	4	0.3	0.3	180	5.7	108	0.6
15	80	3.8	0.3	0.3	125	5.9	100	0.8
20	63	4	0.3	0.3	90	5.7	90	1
25	50	4	0.4	0.4	71	5.6	71	1
30	40	3.8	0.4	0.4	63	5.9	70	1.1
35	36	3.9	0.5	0.5	56	6.2	67	1.2
40	32	4	0.5	0.5	45	5.7	59	1.3
45	28	4	0.5	0.5	41	5.7	56	1.4
50	28	4.4	0.5	0.5	36	5.8	53	1.5

Aluminum									
D	S	V	F	fr	D	S	V	F	fr
mm	rpm	M / min	mm / min	mm / rev	mm	rpm	M / min	mm / min	mm / rev
5	800	12.6	400	0.5	30	140	13.2	154	1.1
10	400	12.6	240	0.6	35	125	13.7	150	1.2
15	280	13.2	224	0.8	40	100	12.6	130	1.3
20	200	12.6	200	1	45	90	12.7	126	1.4
25	160	12.6	160	1	50	80	12.6	120	1.5

1.6 TAP

Tap						
Tap of H.S.S. for Metric Coarse Thread						
Metric	Steel			Cast iron / Aluminum		
D × Pitch	S	V	F	S	V	F
mm	rpm	M / min	mm / min	rpm	M / min	mm / min
M3 × 0.5	500	4.7	250	710	6.9	355
M4 × 0.7	400	5	280	560	7	392
M5 × 0.8	315	4.9	252	450	7	360
M6 × 1	250	4.7	250	355	6.9	355
M8 × 1.25	200	5	250	280	7	350
M10 × 1.5	160	4.9	240	224	7	336
M12 × 1.75	125	4.7	218	180	7	315
M14 × 2	112	4.9	224	160	7	320
M16 × 2	100	5	200	140	7	280
M18 × 2.5	90	5	225	125	7	312
M20 × 2.5	80	4.9	200	112	76	280
M22 × 2.5	71	4.9	177	100	6.9	250
M24 × 3	63	4.7	189	90	6.8	270
M27 × 3	56	4.7	168	80	6.8	240
M30 × 3.5	50	4.7	175	71	6.9	248
M33 × 3.5	50	5.2	175	71	7.4	248

Tap of H.S.S. for Tapered Pipe Thread						
Inched	Steel			Cast iron / Aluminum		
D × No. of Thread	S	V	F	S	V	F
per 25.4 mm	rpm	M / min	mm / min	rpm	M / min	mm / min
1 / 8 × 28	160	4.9	145	224	7	203
1 / 4 × 19	125	5.2	167	180	7.4	240
3 / 8 × 19	100	5.3	133	140	7.3	186
1 / 2 × 14	80	5.2	145	112	7.4	211
3 / 4 × 14	63	5.2	114	90	7.5	163
1 × 11	50	5.2	115	71	7.4	163
1-1 / 4 × 11	40	5.3	92	56	7.4	128
1-1 / 2 × 11	36	5.3	81	50	7.5	115
2 × 11	28	5.2	64	40	7.5	92

Chapter 7

PARTS MANUAL

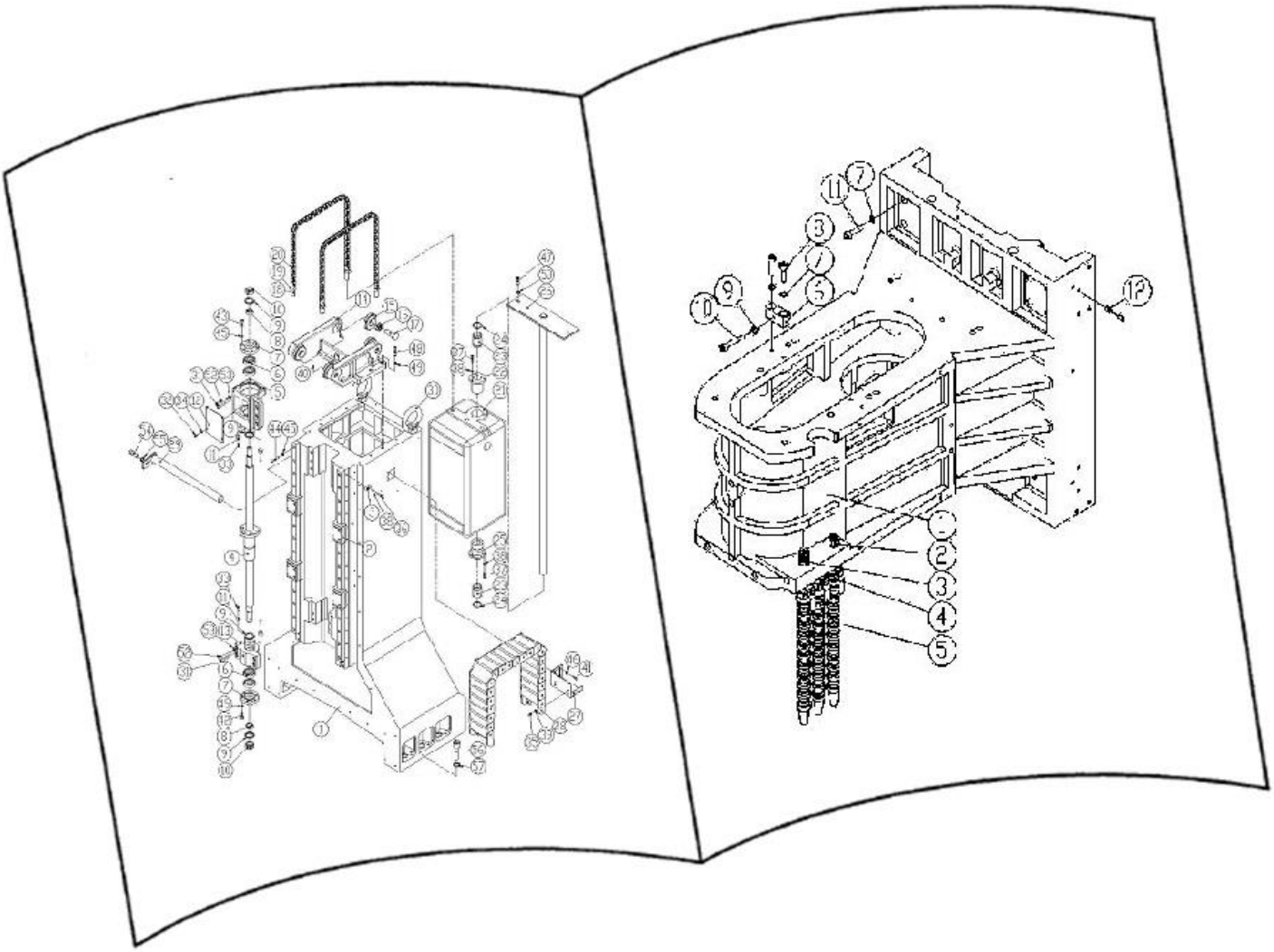

1. SPINDLE HEAD

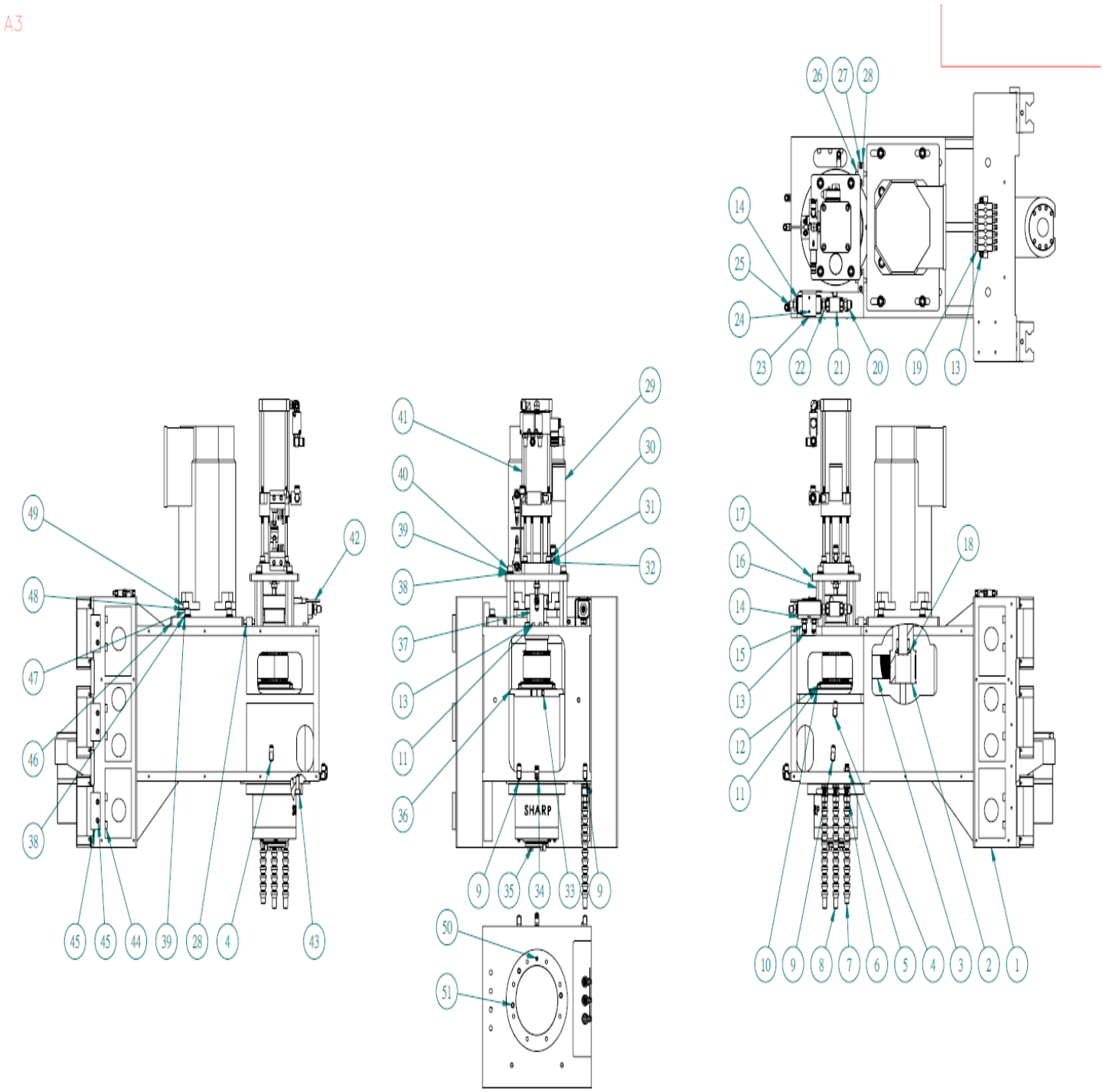

No.	PART NO.	PART NAME	SPECIFICATION	Q'TY	UNIT
1	A2000000202	Headstock	946Lx580Wx540H	1	EA
2	C2004006100	Pully	5GT-60T	1	EA
3	C2004006200	Belt	5GT-780L-50W	1	EA
4	C0062000938	Hydraulic Fittings	PT 1/4xPH 3/8 90°	2	EA
5	C0061000033	One-Touch Couplings	PC08-03	1	EA
6	C0062000763	Ball Valve	3/8"	3	EA
7	C0062000258	ADJUSTABLE COOLANT NOZZLES	PT3/8x12- 6mm	1	EA
8	C0062000917	ADJUSTABLE COOLANT NOZZLES	PT3/8x12- 9mm	2	EA
9	C0062000066	Hydraulic Fittings	PT 1/4XPH 3/8 90°	3	EA
10	D0010041001	Washer	M6	8	EA
11	D0011040906	Spring Washer	M6	8	EA
12	D0000040256	Hexagon Socket Head Cap Screws	M6xP1.0x25L	4	EA
13	D0000040166	Hexagon Socket Head Cap Screws	M6xP1.0x16L	12	EA
14	C0062000010	Shunt Block	3/8"PTx1/2"PT	1	EA
15	C2062001400	T+H Hydraulic Fittings	PT3/8xPH3/8	2	EA
16	A2002001000	Boosting Unclamping Cylinder Pillar	103L	4	EA
17	A2002000201	Boosting Unclamping Cylinder Base	227Lx176Wx15H	1	EA
18	C2004006000	Self Centering	SMA-32	1	EA
19	C2063000200	Volume Distributor	RH-7 0.1cc x6 Holes+0.3cc	1	EA
20	C0062000024	T+H Hydraulic Fittings	PT1/2xPH1/2	1	EA
21	C0062000852	Back Pressure Valve	PT1/2	1	EA
22	C0062000932	T+T Hydraulic Fittings	PT1/2xPT1/2	1	EA
23	B2071015300	Shunt Block Plate	55Lx50Wx25H	1	EA
24	D0000030406	Hexagon Socket Head Cap Screws	M5xP0.8x40	2	EA

25	C0062000033	T+H Hydraulic Fittings	1/2TX3/8H	1	EA
26	D003060406	Hexagon Socket Screws	M10xP1.5x40	2	EA
27	D0000040206	Hexagon Socket Head Cap Screws	M6xP1.0x20L	4	EA
28	A2004000500	Block	50Lx20Wx20H	2	EA
29		Spindle Motor	[FANUC]B8/12000	1	EA
30	D0000060406	Hexagon Socket Head Cap Screws	M10xP1.5x40L	4	EA
31	D0011062226	Spring Washer	M10	4	EA
32	D0010062306	Washer	M10	4	EA
33	D0000040356	Hexagon Socket Head Cap Screws	M6xP1.0x35L	1	EA
34	C0061000017	One-Touch Couplings	SPL8-01	1	EA
35	C2004005700	Spindle	[SETCO]531A570,BVC40 *12K*5GT-60T	1	EA
36	A2001000401	Fixed Ring	D190xd150x15H	1	EA
37	B2071014900	Switch Plate	75Lx60Wx50H	1	EA
38	D0010071801	Washer	M12	8	EA
39	D0011070021	Spring Washer	M12	8	EA
40	D0000070306	Hexagon Socket Head Cap Screws	M12xP1.75x30L	4	EA
41	C0002000800	Boosting Unclamping Cylinder	4500kgX13m/m	1	EA
42	E0082005100	Proximity Sensor	E2E2-X2B2 2M	1	EA
43	D0000060306	Hexagon Socket Head Cap Screws	M10xP1.5x30L	8	EA
44	D0000060556	Hexagon Socket Head Cap Screws	M10xP1.5x55	36	EA
45	A2053000801	Block	80Lx35Wx12H	3	EA
46	A2004000800	Motor Plate	360Lx260Wx20H	1	EA
47	D0000070456	Hexagon Socket Head Cap Screws	M12xP1.75x45L	4	EA
48	D0011080246	Spring Washer	M14	4	EA
49	D0000080401	Hexagon Socket Head Cap Screws	M14xP2.0x40	4	EA
50	C2001000300	O-Ring	P5	1	EA

51	C2001000100	O-Ring	P8	3	EA

2. Column

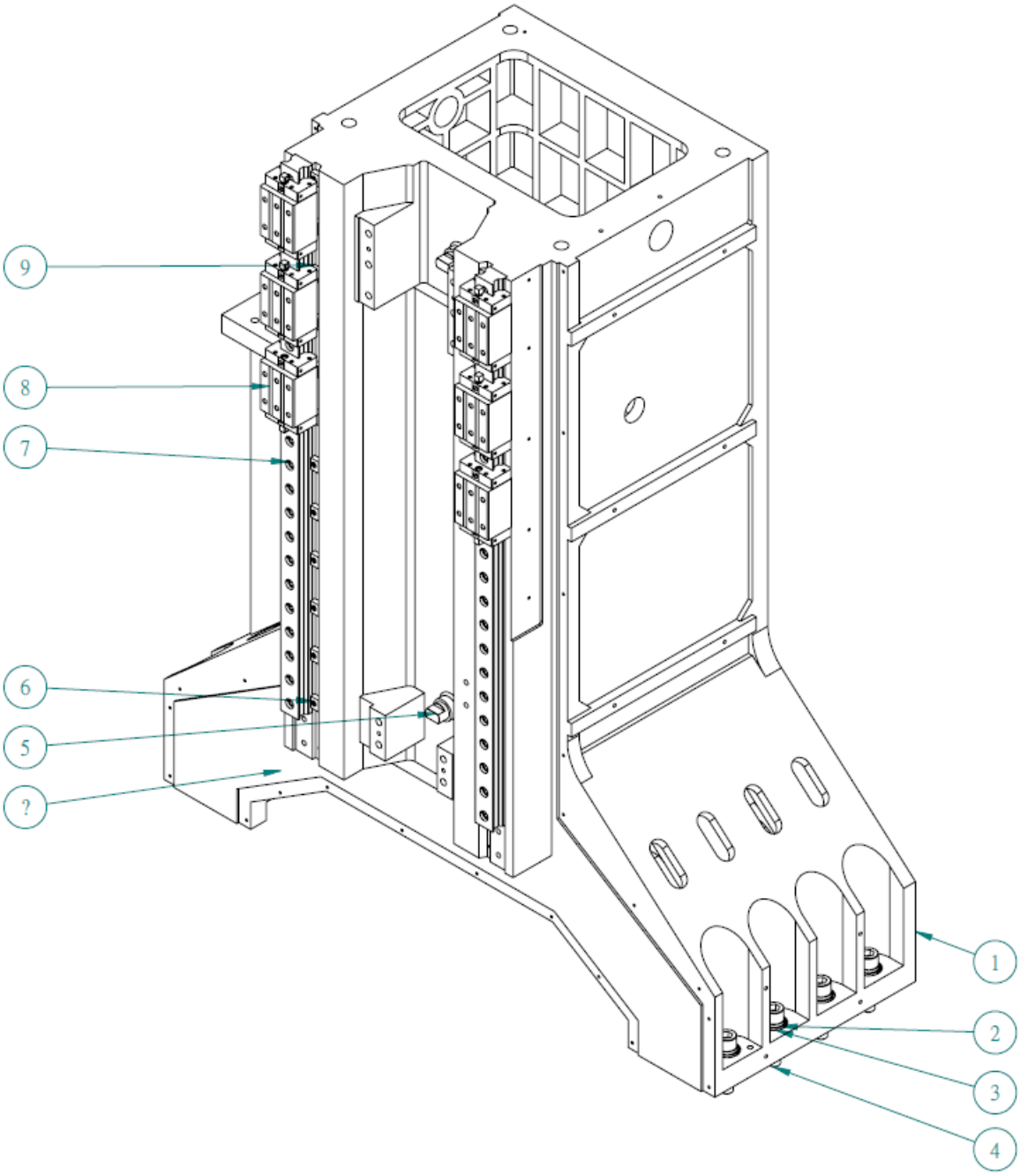

No.	PART NO.	PART NAME	SPECIFICATION	Q'TY	UNIT
1	A2010000202	Column	FC300	1	EA
2	D0011130401	Spring Washer	M24	8	EA
3	D0010230441	Washer	D44xd226x4.5T	8	EA
4	D0000131001	Hexagon Socket Head Cap Screws	M24xP3.0x100L	8	EA
5	A2051001301	Positioning Shaft	D35x56L	2	EA
6	D0000040206	Hexagon Socket Head Cap Screws	M6xP1.0x20L	24	EA
7	D0000050456	Hexagon Socket Head Cap Screws	M12xP1.75x45L	46	EA
8	C2053000400	Z Axis Linear Guides	MSR45S3SSF2A+R1205-25/25HII	1	SET
9	C2088001100	Guide	T2	24	EA

Z AXIS BALLSCREW

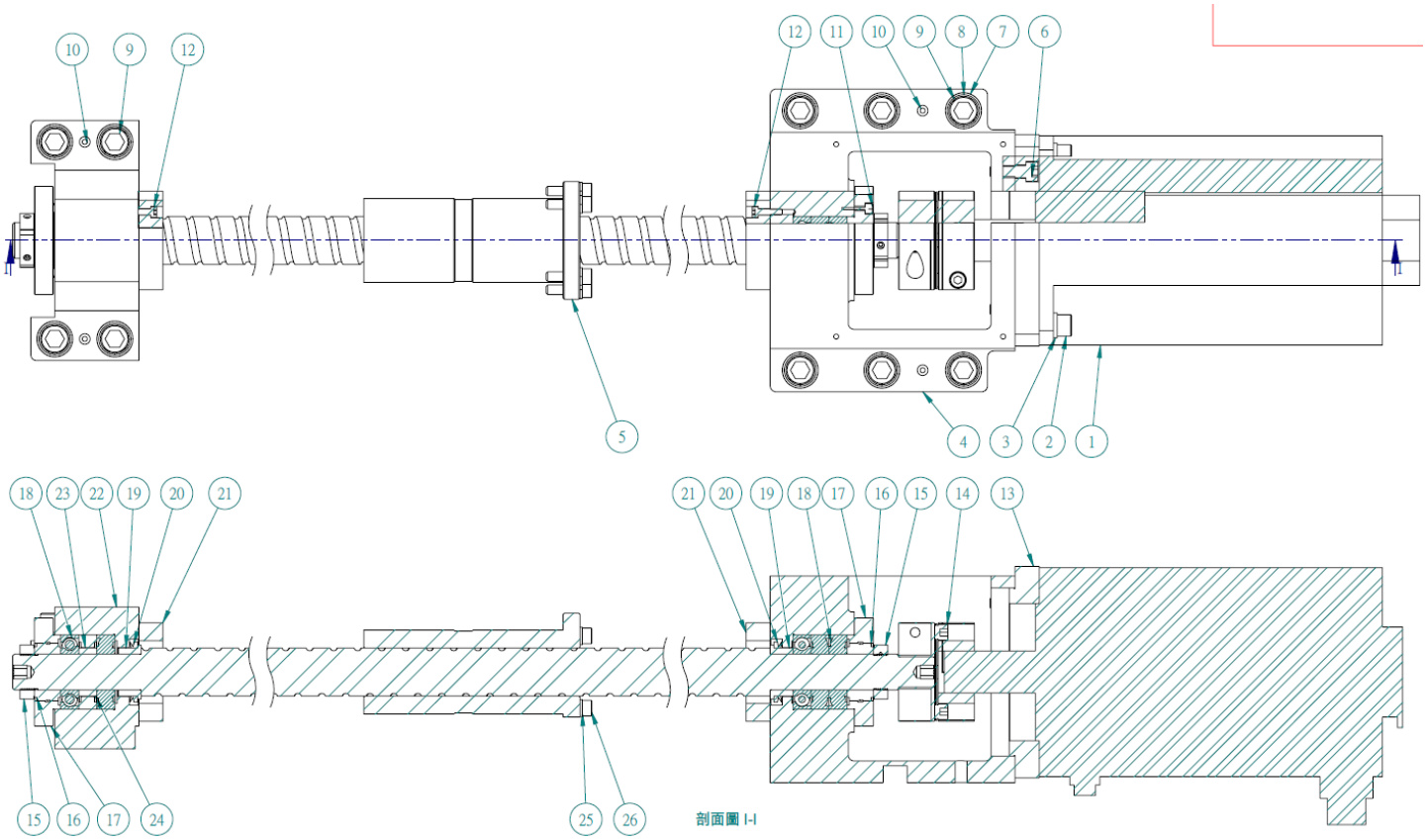

No.	PART NO.	PART NAME	SPECIFICATION	Q'TY	UNIT
1		Server Motor	β30-2000iB	1	EA
2	D0000070306	Hexagon Socket Head Cap Screws	M12xP1.75x30L	4	EA
3	D0011070021	Spring Washer	M12	4	EA
4	A2051000300	Transmission Housing	204Lx252Wx172H	1	EA
5	C2052001400	Z AXIS Ball Screws	1R40-20T3-1FDDC-879-1123-0.008	1	EA
6	D0000060306	Hexagon Socket Head Cap Screws	M10xP1.5x30L	4	EA
7	D0010092401	Washer	M16	10	EA
8	D0011090026	Spring Washer	M16	10	EA
9	D0000090606	Hexagon Socket Head Cap Screws	M16xP2.0x60L	10	EA
10	D0016340455	Slide Pin	1/50-D8-45L-M5	4	EA
11	D0000040206	Hexagon Socket Head Cap Screws	M6xP1.0x20L	8	EA
12	D0000030206	Hexagon Socket Head Cap Screws	M5xP0.8x20L	8	EA
13	A2051000500	Motor Base Adapter Plate	176Lx176Wx25H	1	EA
14	C0050002200	Coupling	達祿-SHS-82C D35-D25	1	EA
15	C0088010900	Precision Locknut	YSR M30x1.5	2	EA
16	A2051000700	Laminal Ring	D48x22H	2	EA
17	A2051000801	Bearing Cap	D90x22L	2	EA
18	C0088008300	Bearing	30TAC62CSUHPN5D	5	EA
19	A2051000601	Bearing Spacer	D45x19H	2	EA
20	C0088008400	C type O-Ring	V-40A	2	EA
21	A2051001200	Rubber Cushion	Φ82x20H	2	EA
22	A2051000401	Rear Bearing Housing	200Lx118Wx114H	1	EA
23	A2051001100	Bearing Spacer		1	EA
24	A2051001000	Bearing Spacer		1	EA
25	D0011050146	Spring Washer	M8	8	EA
26	D0000050306	Hexagon Socket Head Cap Screws	M8xP1.25x30L	8	EA

3. Base

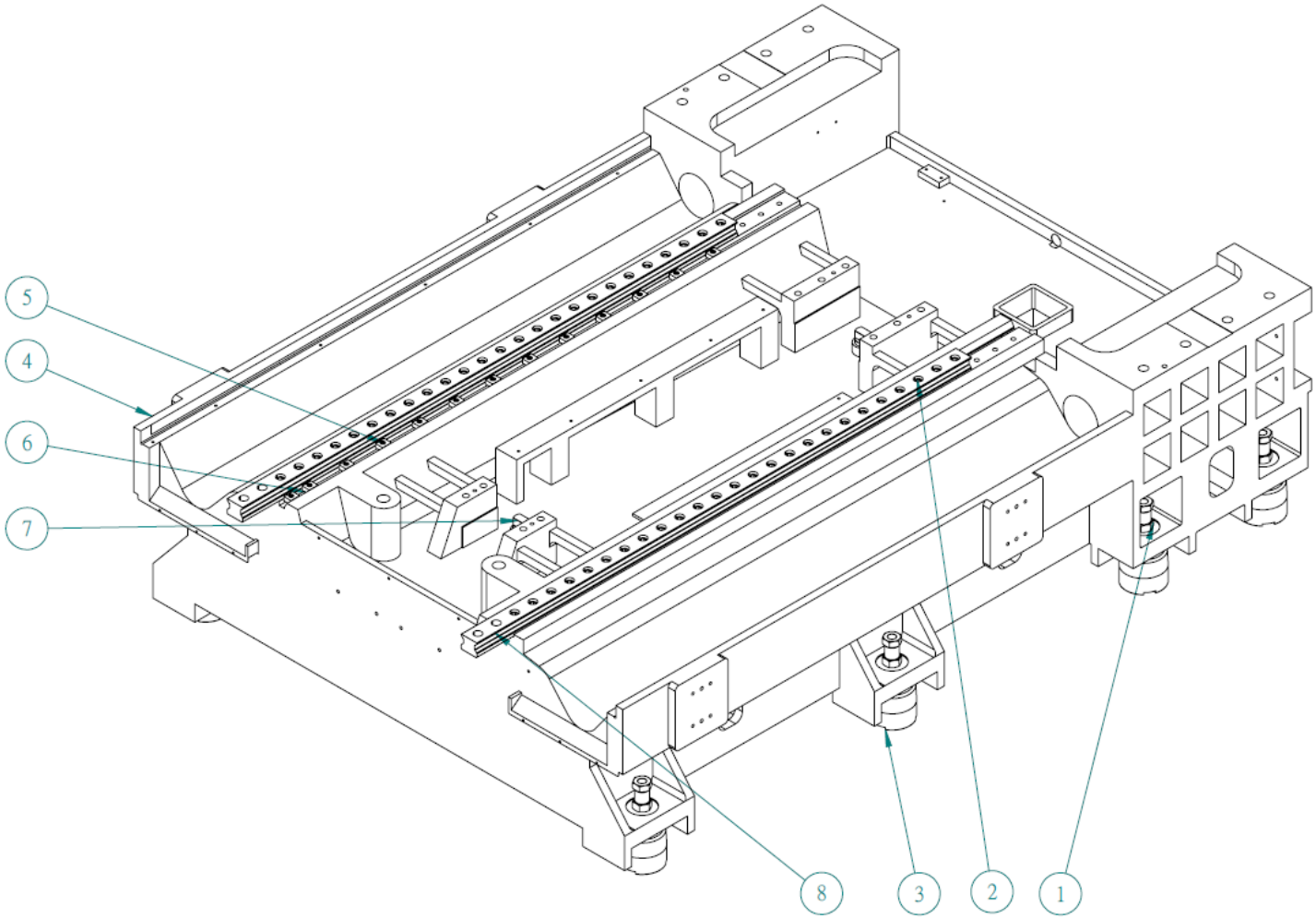

No.	PART NO.	PART NAME	SPECIFICATION	Q'TY	UNIT
1	C2088001600	Foundation Screw+Nut	M30xP2.0x120L	8	EA
2	D0000070456	Hexagon Socket Head Cap Screws	M12xP1.75x45L	50	EA
3	A2044000401	Foundation Block	FC250	8	EA
4	A2040000201	BASE	FC300	1	EA
5	D0000040206	Hexagon Socket Head Cap Screws	M6xP1.0x20L	26	EA
6	C2088001100	Guide	T2	26	EA
7	A2051001301	Positioning Shaft	D35x56L	2	EA
8	C2052000200	Y AXIS Linear Guide	MSR45LS2SSF2A+ R1415-25/25HII	1	SET

Y AXIS BALLSCREW

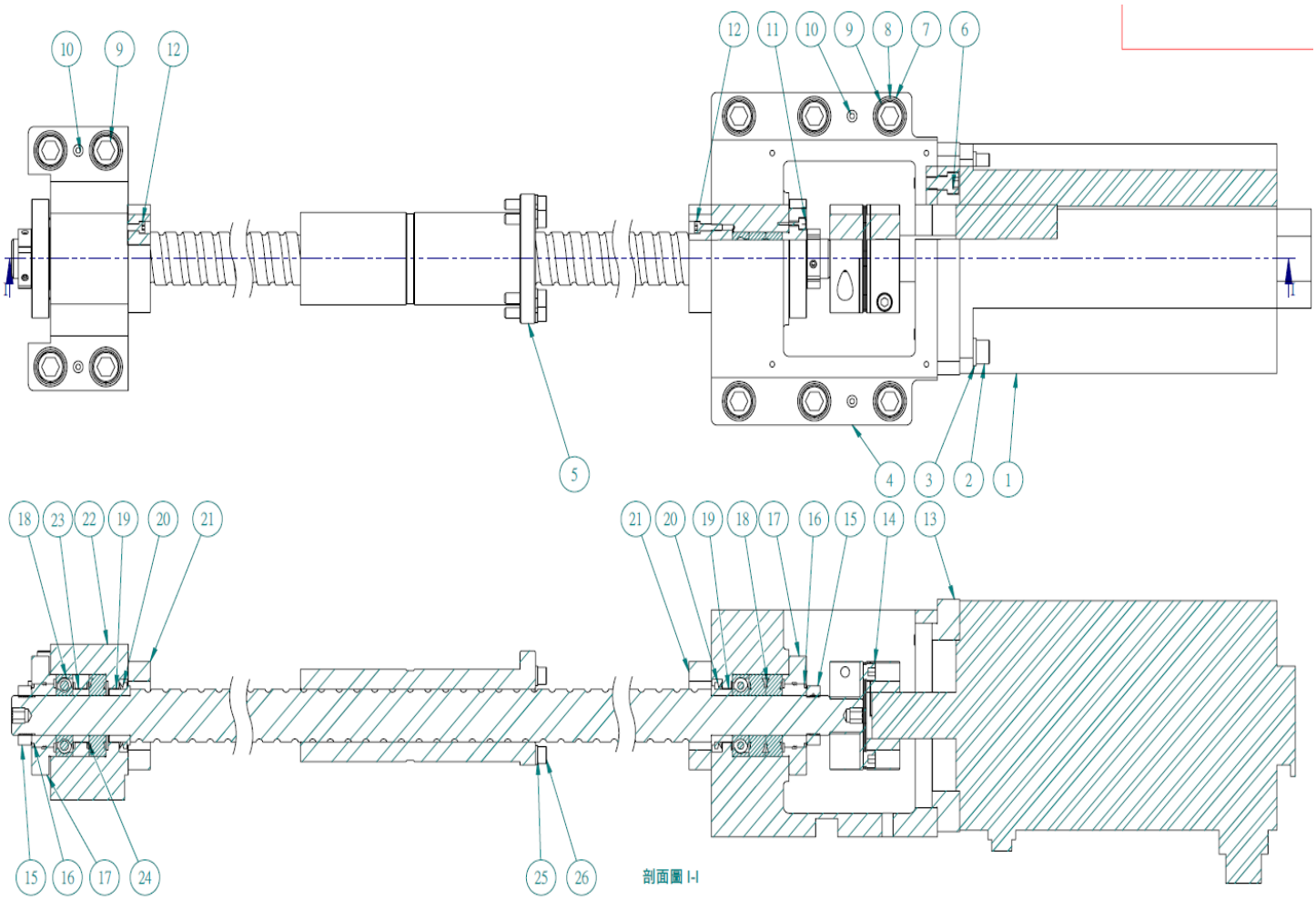

No.	PART NO.	PART NAME	SPECIFICATION	Q'TY	UNIT
1		Server Motor	β22-2000i	1	EA
2	D0000070306	Hexagon Socket Head Cap Screws	M12xP1.75x30L	4	EA
3	D0011070021	Spring Washer	M12	4	EA
4	A2051000300	Transmission Housing	204Lx252Wx172H	1	EA
5	C2052001600	Y AXIS Ballscrews	1R40-16T5-1FDDC-879-1123-0.008	1	EA
6	D0000060306	Hexagon Socket Head Cap Screws	M10xP1.5x30L	4	EA
7	D0010092401	Washer	M16	10	EA
8	D0011090026	Spring Washer	M16	10	EA
9	D0000090606	Hexagon Socket Head Cap Screws	M16xP2.0x60L	10	EA
10	D0016340455	Slide Pin	1/50-D8-45L-M5	4	EA
11	D0000040206	Hexagon Socket Head Cap Screws	M6xP1.0x20L	8	EA
12	D0000030206	Hexagon Socket Head Cap Screws	M5xP0.8x20L	8	EA
13	A2051000500	Motor Base Adapter Plate	176Lx176Wx25H	1	EA
14	C0050002200	Coupling	達祿-SHS-82C D35-D25	1	EA
15	C0088010900	Precision Locknut	YSR M30x1.5	2	EA
16	A2051000700	Laminal Ring	D48x22H	2	EA
17	A2051000801	Bearing Cap	D90x22L	2	EA
18	C0088008300	Bearing	30TAC62CSUHPN5D	5	EA
19	A2051000601	Bearing Spacer	D45x19H	2	EA
20	C0088008400	C type O-Ring	V-40A	2	EA
21	A2051001200	Rubber Cushion	Φ82x20H	2	EA
22	A2051000401	Rear Bearing Housing	200Lx118Wx114H	1	EA
23	A2051001100	Bearing Spacer		1	EA
24	A2051001000	Bearing Spacer		1	EA
25	D0011050146	Spring Washer	M8	8	EA
26	D0000050306	Hexagon Socket Head Cap Screws	M8xP1.25x30L	8	EA

4. Saddle & Table

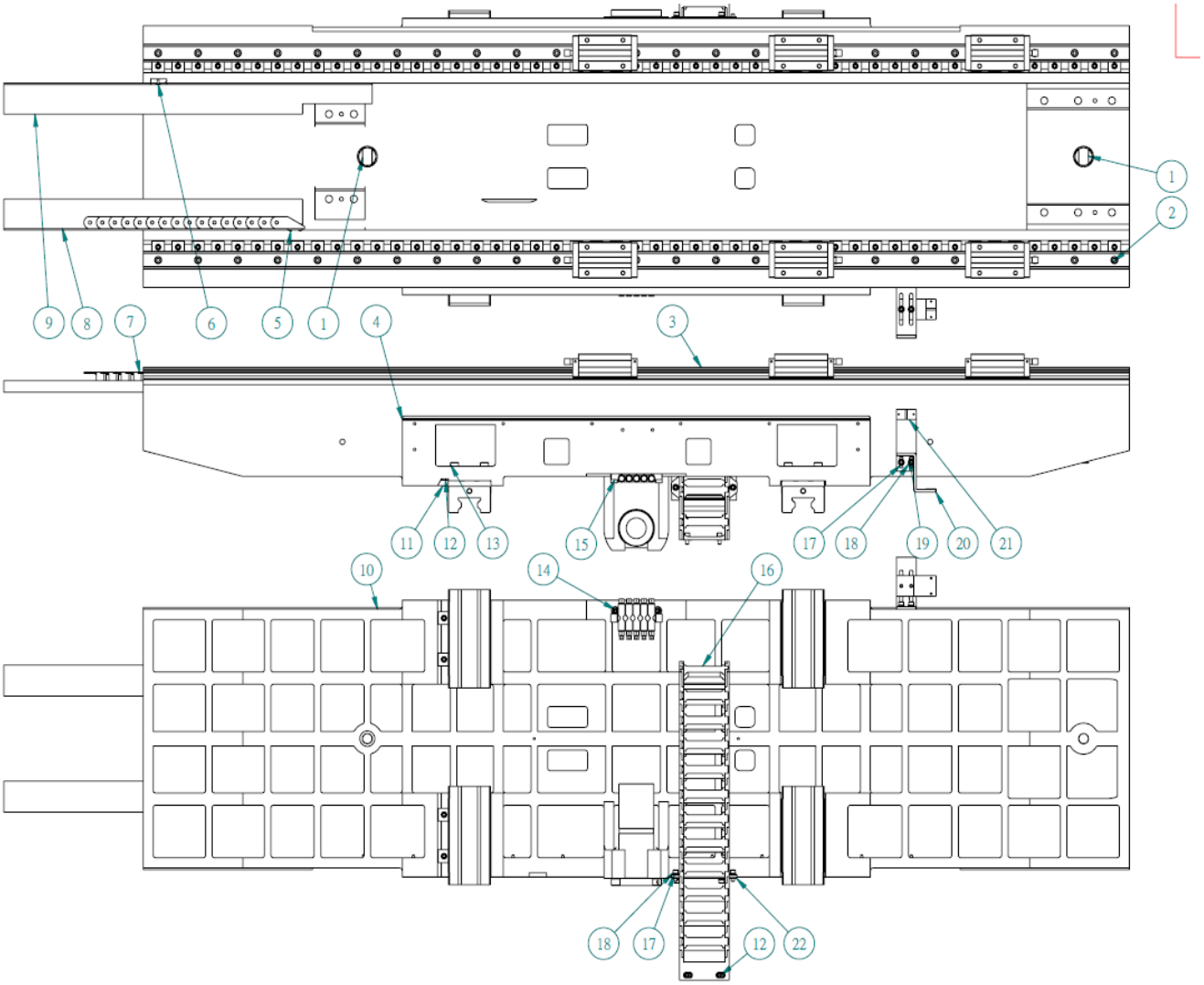

No.	PART NO.	PART NAME	SPECIFICATION	Q'TY	UNIT
1	A2051001301	Positioning Shaft	D35x56L	2	EA
2	D0000050306	Hexagon Socket Head Cap Screws	M8xP1.25x30L	98	EA
3	C2051002400	X AXIS Linear Guides	MSA35S3SSF1A+R1980-30/30HII	1	SET
4		O-Ring	Wire diameter: 2.4x940L	2	EA
5	D0000040206	Hexagon Socket Button Head Cap Screws	M6xP1.0x10L	2	EA
6	D0002030106	Socket Head Cap Screws	M5xP0.8x10L	6	EA
7	E2082005200	X AXIS Square Protective Tube	SQ603-III-KR75-1128L-NO4(47)	1	SET
8	B2071014400	X AXIS Square Protective Tube Plate	600Lx60Wx37H	1	EA
9	B2071014500	X AXIS Square Protective Tube Plate	740Lx60Wx37H	1	EA
10	A2020000201	Saddle	1980Lx537Wx325H	1	EA
11	C2088001100	Guide	T2	102	EA
12	D0000040166	Hexagon Socket Head Cap Screws	M6xP1.0x16L	112	EA
13	D0000030126	Hexagon Socket Head Cap Screws	M10xP1.5x40L	16	EA
14	D0000030126	Hexagon Socket Head Cap Screws	M5xP0.8x12L	2	EA
15	C2163000100	Volume Distributor	RH-5 0.1cc x4 Holes+0.3cc x1 Hole	1	EA
16	E2082000800	Y AXIS Square Protective Tube	SQ604-V-KR40-960L-NO9(20)	1	SET
17	D0010041001	Washer	M6	12	EA
18	D0011040906	Spring Washer	M6	10	EA
19	B2070000700	X AXIS Origin	L120xW100xH40	1	EA
20	B2070000800	X AXIS Origin	L80xW75xH40	1	EA
21	F0000000879	Grid Origin Plate	L40xW20xH1	2	EA
22	B2071014600	Plate	130Lx84Wx3H	1	EA

X AXIS BALLSCREW

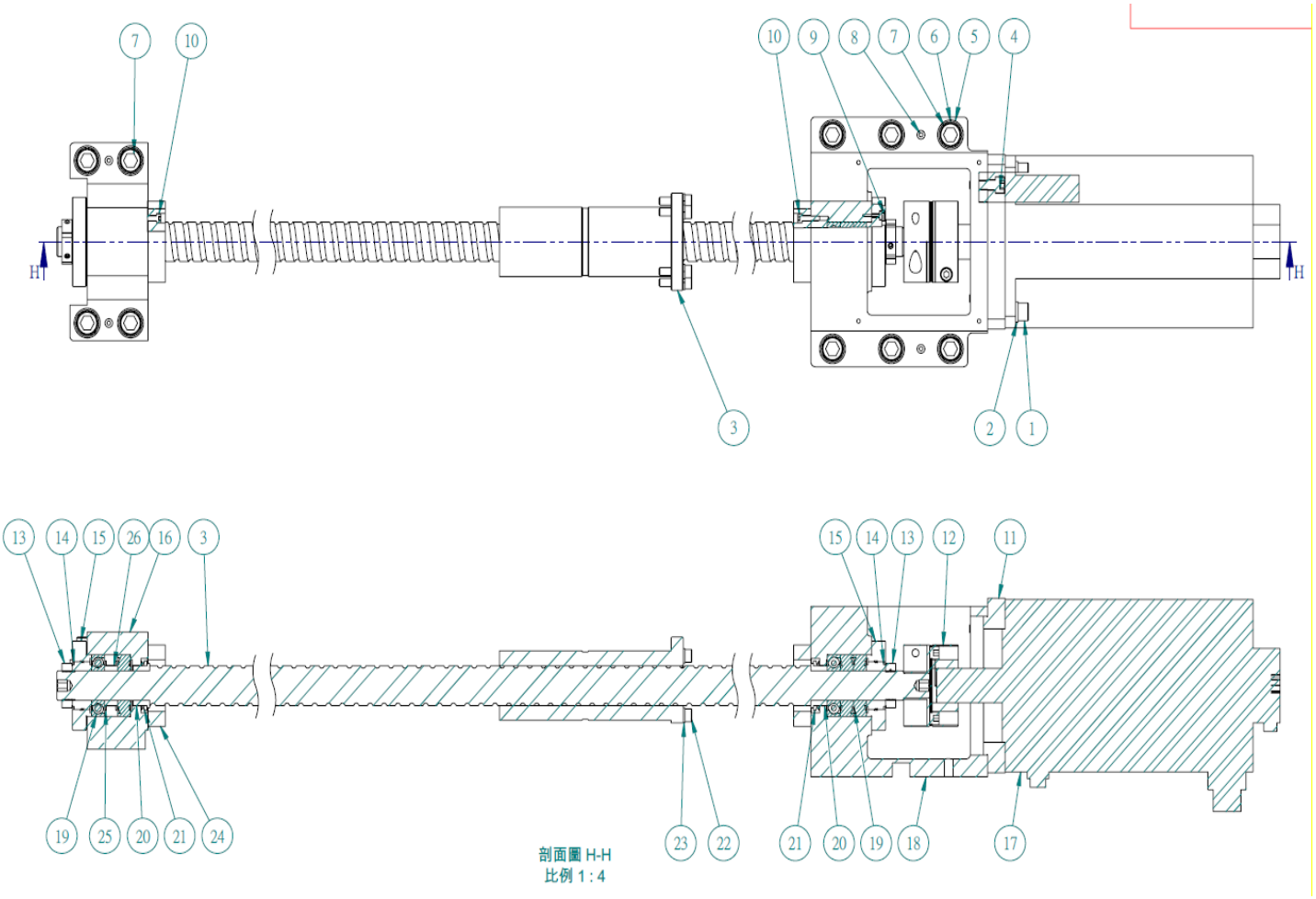

No.	PART NO.	PART NAME	SPECIFICATION	Q'TY	UNIT
1	D0000070306	Hexagon Socket Head Cap Screws	M12xP1.75x30L	4	EA
2	D0011070021	Spring Washer	M12	4	EA
3	C2051002300	X AXIS Ballscrews	1R40-16T5-1FDDC-1339-1583-0.008	1	EA
4	D0000060306	Hexagon Socket Head Cap Screws	M10xP1.5x30L	4	EA
5	D0010092401	Washer	M16	10	EA
6	D0011090026	Spring Washer	M16	10	EA
7	D0000090606	Hexagon Socket Head Cap Screws	M16xP2.0x60L	10	EA
8	D0016340455	Slide Pin	1/50-D8-45L-M5	4	EA
9	D0000040206	Hexagon Socket Head Cap Screws	M6xP1.0x20L	8	EA
10	D0000030206	Hexagon Socket Head Cap Screws	M5xP0.8x20L	8	EA
11	A2051000500	Motor Base Adapter Plate	176Lx176Wx25H	1	EA
12	C0050002200	Coupling	達祿-SHS-82C D35-D25	1	EA
13	C0088010900	Precision Locknut	YSR M30x1.5	2	EA
14	A2051000700	Laminal Ring	D48x22H	2	EA
15	A2051000801	Bearing Cap	D90x22L	2	EA
16	A2051000401	Rear Bearing Housing	200Lx118Wx114H	1	EA
17		Server Motor	β22-2000i	1	EA
18	C0088008300	Bearing	30TAC62CSUHPN5D	5	EA
19	A2051000300	Transmission Housing	204Lx252Wx172H	1	EA
20	A2051000601	Bearing Spacer	D45x19H	2	EA
21	C0088008400	C type O-Ring	V-40A	2	EA
22	A2051001200	Rubber Cushion	Φ82x20H	2	EA
23	A2051001100	Bearing Spacer		1	EA
24	A2051001000	Bearing Spacer		1	EA
25	D0011050146	Spring Washer	M8	8	EA
26	D0000050306	Hexagon Socket Head Cap Screws	M8xP1.25x30L	8	EA

5. Lubrication

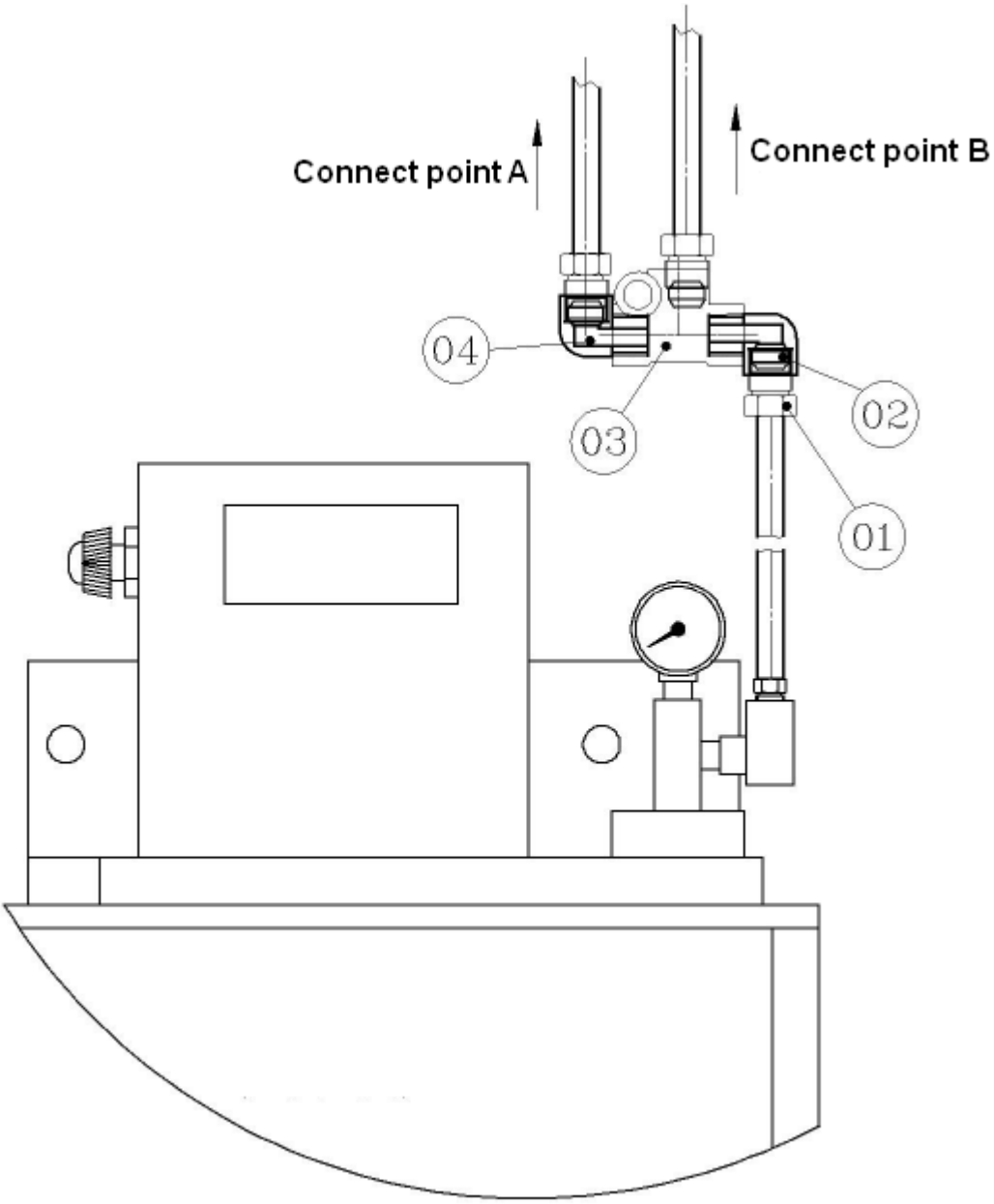

Item	Size	Name	Qty
1.	PA6	Bushing	3
2.	PB6	Nipple	3
3.	PKD6	Tee	1
4.	PH601	90° elbow	2

7.1 Saddle Distributor

Connect A with oil tube

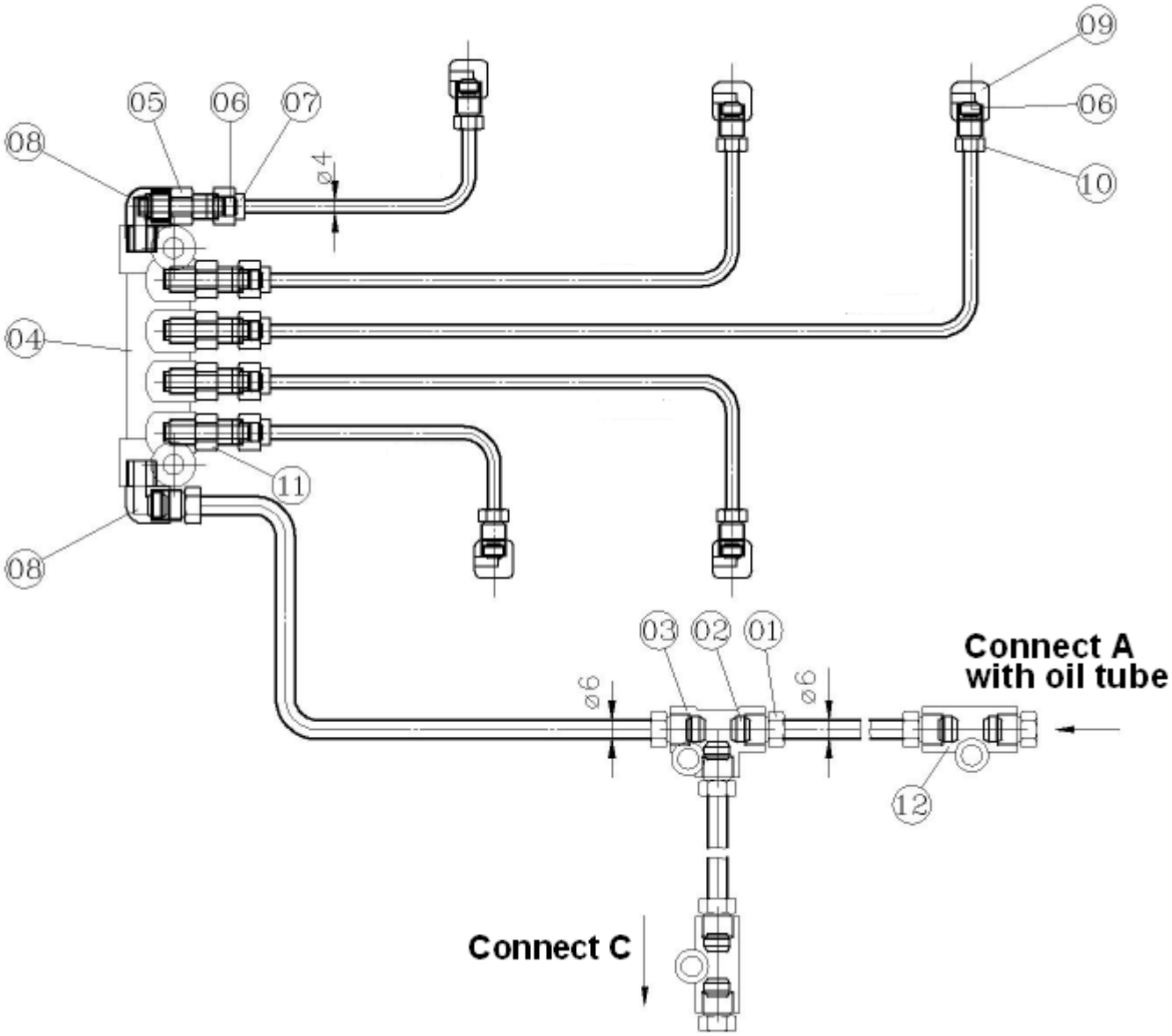

Item	Size	Name	Qty	Item	Size	Name	Qty
1.	PA6	Bushing	8	7	PAN4	Nut	5
2.	PB6	Nipple	8	8	PH401	90° elbow	2
3.	PKD6	Tee	1	9	PH4-1	90° elbow	5
4.	DB-6	Oil distributor	1	10	PA4	Bushing	5
5.	CCS	Quantitative distributor	1	11	CTS	Quantitative distributor	5
6.	PB4	Nipple	10	12	JD6	Coupling	2

7.2 Spindle Distributor

Connect B with oil tube

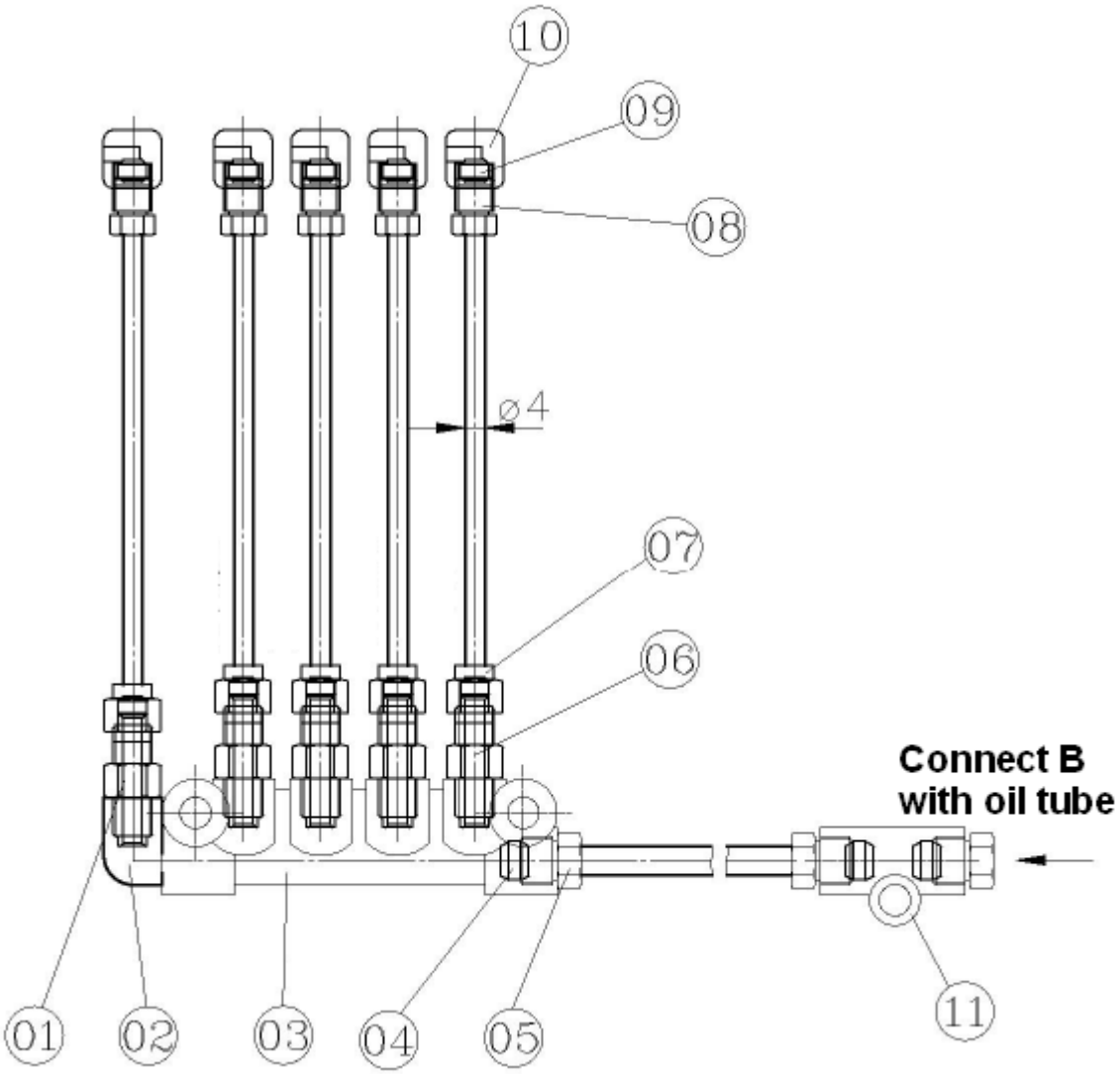

Item	Type	Name	Qty	Item	Type	Name	Qty
1.	CSS	Quantitative distributor	1	7	PAN4	Nut	5
2.	PH401	90° elbow	1	8	PA4	Bushing	5
3.	DB-6	Oil distributor	1	9	PB4	Nipple	10
4.	PB6	Nipple	3	10	PH4-1	90° elbow	5
5.	PA6	Bushing	3	11	JD6	Coupling	1
6.	CTS	Quantitative distributor	4				

7.3 Table Distributor

Connect C with oil tube

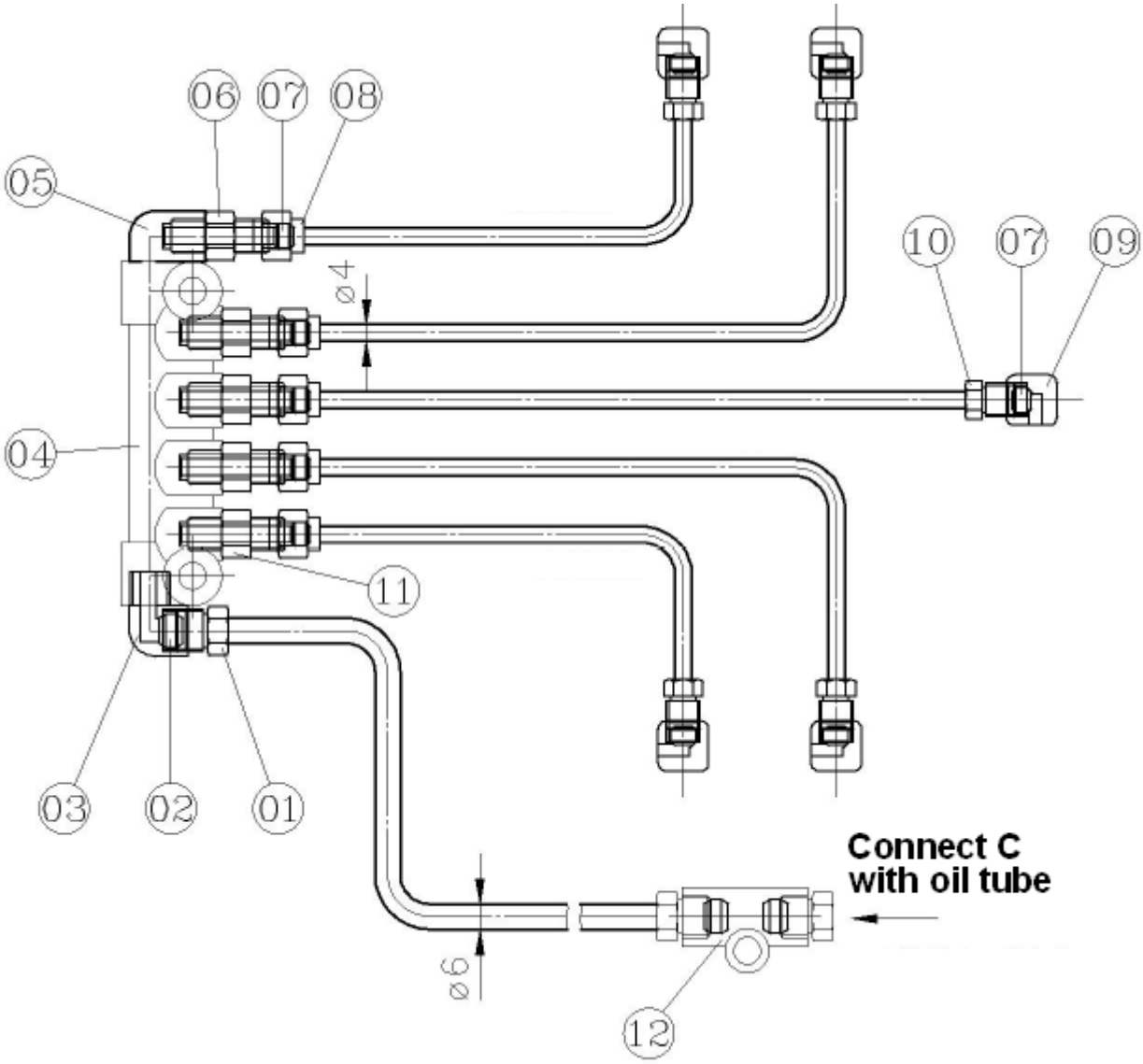

Item	Type	Name	Qty	Item	Type	Name	Qty
1	PA6	Bushing	3	7	PB4	Nipple	10
2	PB6	Nipple	3	8	PAN4	Nut	5
3	PH601	90° elbow	1	9	PH4-1	90° elbow	5
4	DB-6	Oil distributor	1	10	PA4	Bushing	5
5	PH401	90° elbow	1	11	CTS	Quantitative distributor	4
6	CSS	Quantitative distributor	1	12	JD6	Coupling	1

7.4 Telescopic Cover

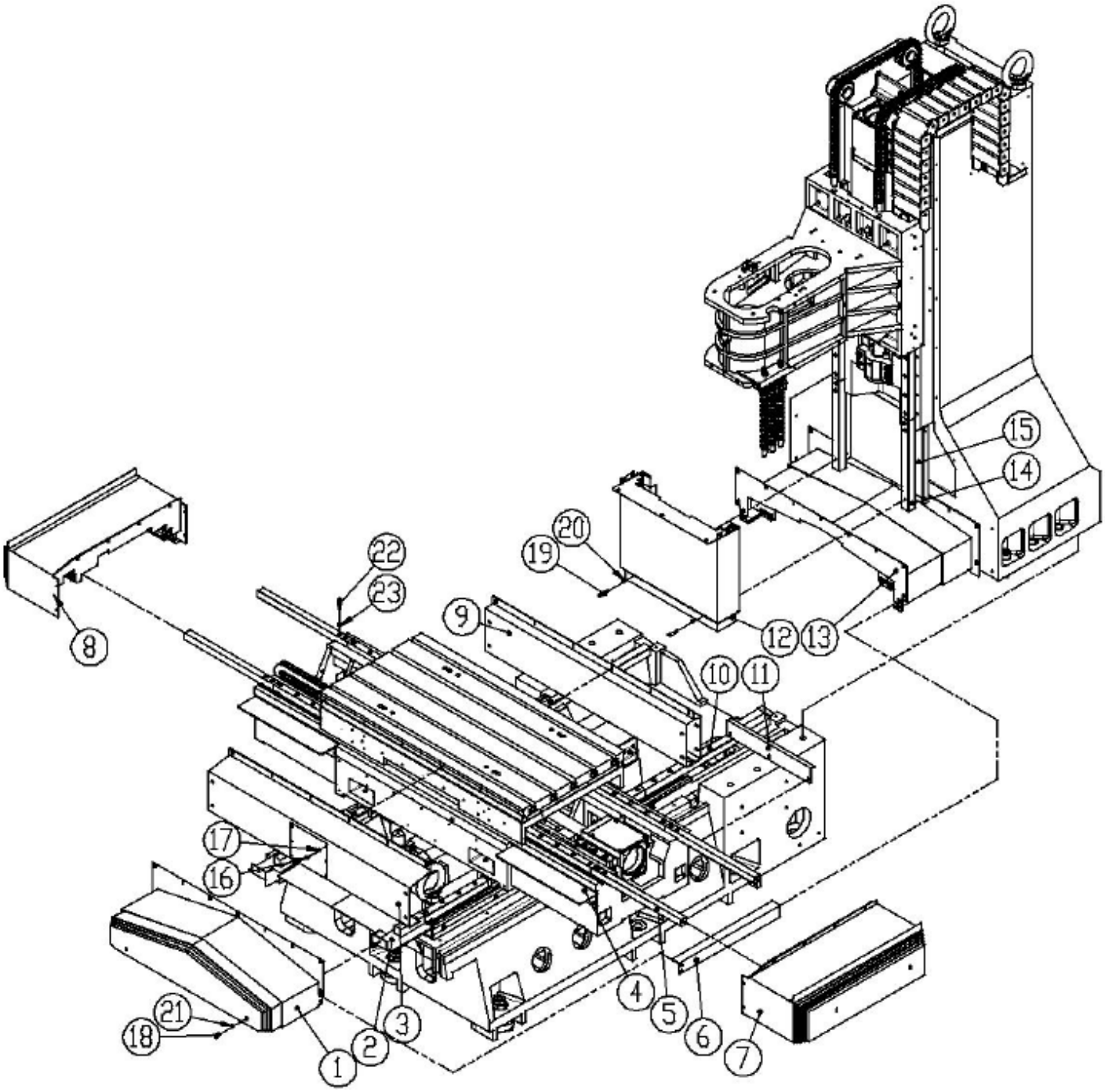

Item	Name	Qty	Item	Name	Qty
1	Y axis front telescopic cover	1	13	Y axis rear telescopic cover	1
2	Y axis front telescopic cover bracket	2	14	Z axis telescopic cover bracket	2
3	Table front cover	1	15	Z axis side cover	1
4	Cover of saddle front (left & right)	2	16	Hex socket head cap screw	6
5	X axis side telescopic cover bracket	4	17	Washer	6
6	Y axis extention cover	2	18	Hex socket head cap screw	100
7	X axis right telescopic cover	1	19	Hex socket head cap screw	2
8	X axis left telescopic cover	1	20	Safety washer	2
9	Table rear cover	1	21	Washer	100
10	Y axis rear telescopic cover bracket	2	22	Hex socket head cap screw	16
11	Cover of saddle rear (left & right)	2	23	Safety washer	16
12	Z axis telescopic cover	1			

7.5 Lists of Recommended Lubricants for Parts

Brand / Item	Mobil	Shell	Esso	Casirol	CPC.
Air pressure	Rarus 424	Corena S32	Teresso 32	Hyspin VG32 Perfecto T32	Circulation R32
Rail guide	Vactra 2	Tonna T68	Febis K68	Magna BD68	Way Lubricant68
Linear guide	Vactra 1	Tonna T32	Febis K32	Magna GC32	Way Lubricant32
Spindle coolant	Velocite 10	Turbo T32	Spinesso 22	Hyspin VG32 Perfecto T32	Spindle R22
Oil pressure	DTE Ligbt	Tellus 32	Nuto H32	Hyspin AWS32	Circulation R32
Table & connected gear	Mobile Gard	Omala EP150	Spartan EP150	Alpha SP150	E.P. Lubricant HD150
Spindle motor & gear box	DTE Heavy DTE Medium	Tellus 68	Nuto H68	Alpha SP68	Circulation R68
Arm & gear box	Mobile Gear 600 Mobile Gear 632	Omala EP320	Spartan EP320	Alpha SP320 Alpha EP320	E.P. Lubricant HD150

6. SPINDLE

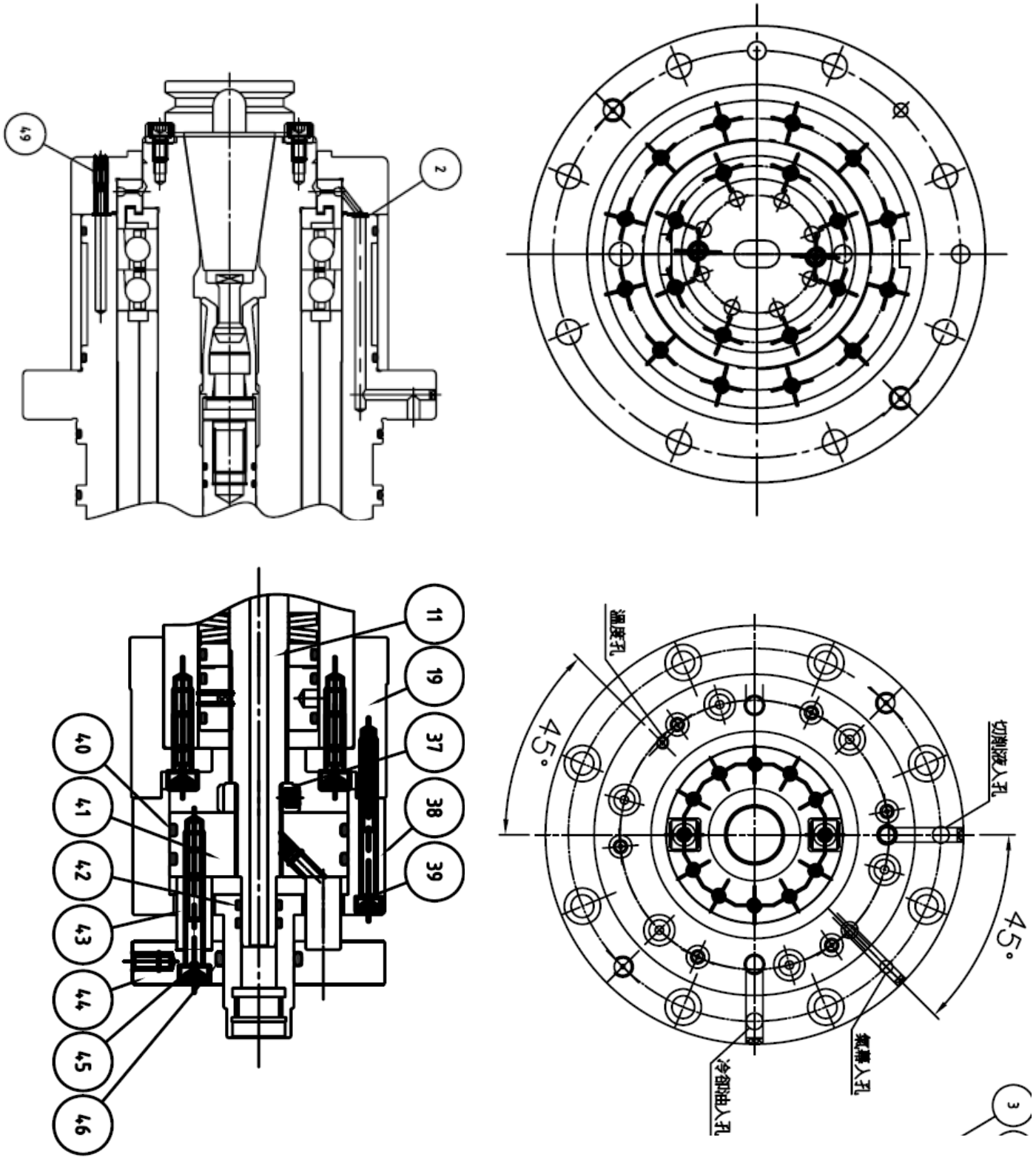

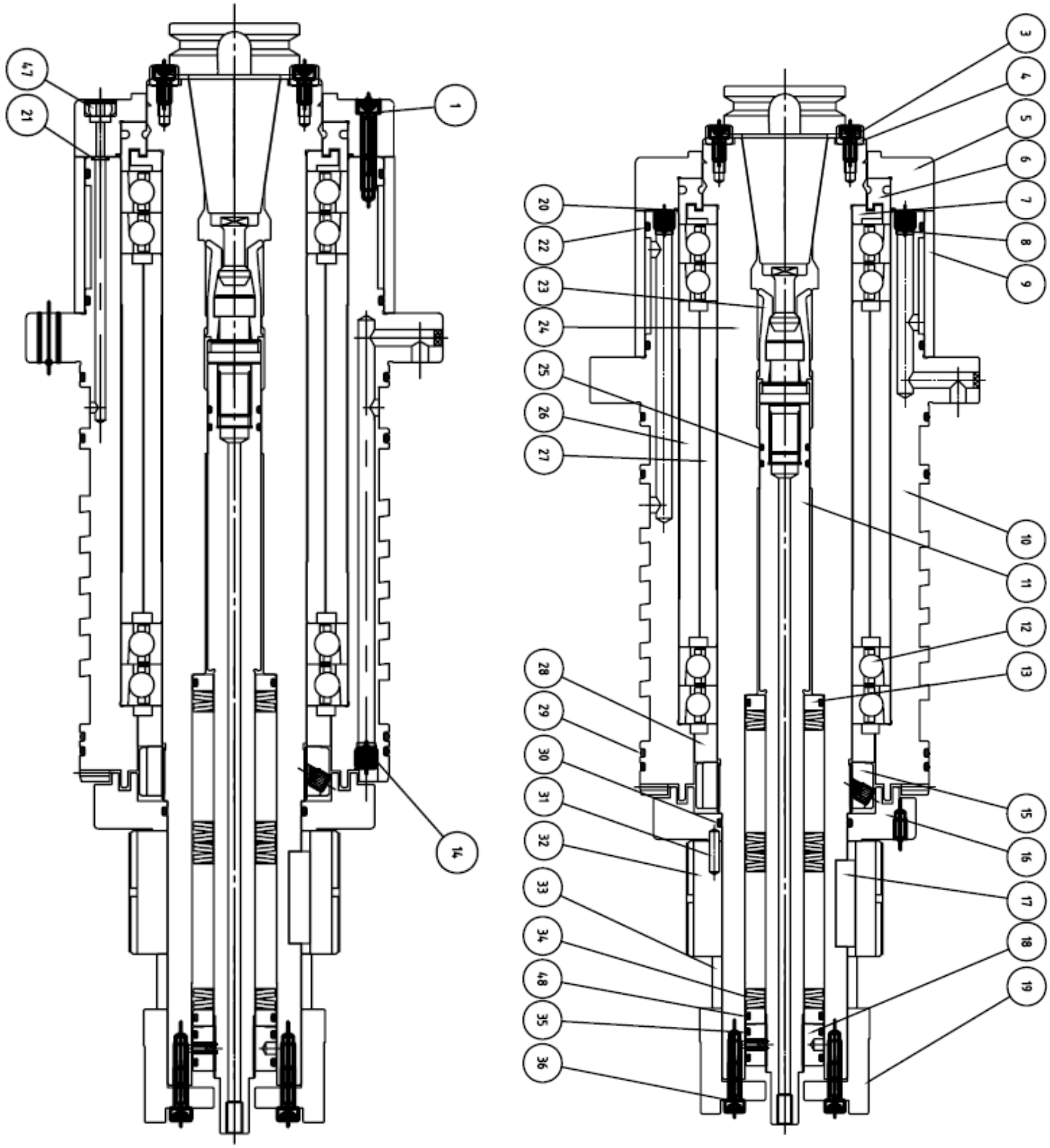
3
4
5
6
7
8
9
10
11
12
13
15
16
17
18
19
20
22
23
24
25
26
27
28
29
30
31
32
33
34
48
35
36
1
14
47
21

Item	NAME	SIZE	ORDER NUMBER	Qty
10	Hex Socket-Head Screw	M6xP1.0x30	D0000040301	6
20	O-Ring	ID29.7,W3.5	C0062000113	2
30	Hex Socket-Head Screw	M6xP1.0x20	D0000040231	2
40	Fixed Key	R0021B	A0001000100	2
50	Cover	R2062A	A0001000200	1
60	Collar	R0006B	A0001000300	1
70	Collar	R5054A	A0001000400	1
80	Plug	PT1/8	C0062000112	3
90	Jacketing	R1271A	A0001000500	1
100	Spindle Body	R2059A	A0001000600	1
110	Pull Stud	R1122D	A0001000700	1
120	Steel Bearing	HS7014C.T.P4S.UL	C0088005000	4
130	Washer	R0013C	A0001000800	2
140	Blot	SNA3-6(90102)	C0062000150	6
150	Nut	YSF M70*P2	C0088005100	1
160	Collar	R1266A	A0001000900	1
170	Round Key	R4180B	A0001001000	1
180	Nut	R1314B	A0001001100	1
190	Sensor Ring	R1152E	A0001001200	1
200	O-Ring	ID4.8,W1.9	C0062000151	7
210	O-Ring	ID134.4,W3.1	C0062000152	2
220	Collect	CAT40(90009)	A0001001300	1
230	Shaft	R1264A	A0001001400	1
240	O-Ring	ID21.8,W2.4	C0062000153	2
250	Collar	R5198A	A0001001500	1
260	Collar	R5199A	A0001001600	1

Item	NAME	SIZE	ORDER NUMBER	Qty
270	Collar	R1114A	A0001001700	1
280	O-Ring	ID139.4,W3.1	C0062000154	4
290	O-Ring	ID64.4,W3.1	C0062000155	1
300	Spring pin	φ5x16	C0088005400	2
310	Belt Pulley	R1265B	A0001001800	1
320	Bush	R1267A	A0001001900	1
330	Disk Spring	40*20.4*2.5	C0088005500	56
340	O-Ring	ID34.7,W3.5	C0062000156	2
350	Hex Socket-Head Screw	M6xP1.0x35	D0000040351	8
360	Nut	YSR M16*P1.5	C0088005200	1
370	Adapter	R1033D	A0001002000	1
380	Hex Socket-Head Screw	M5xP0.8x45	D0000030451	6
390	O-Ring	ID51.6,W5.7	C0062000157	2
400	Nut	R1034C	A0001002100	1
410	O-Ring	ID11.8,W2.4	C0062000158	2
420	Bracket	R1035B	A0001002200	4
430	Cylinder Seat	R1032D	A0001002300	1
440	Hex Socket-Head Screw	M6xP1.0x40	D0000040401	4
450	O-Ring	ID23.4,W3.1	C0062000159	1
460	Collar	R0008B	A0001002400	2
470	Collar	R0010A	A0001002500	2
480	Collar	R5055A	A0001002600	1

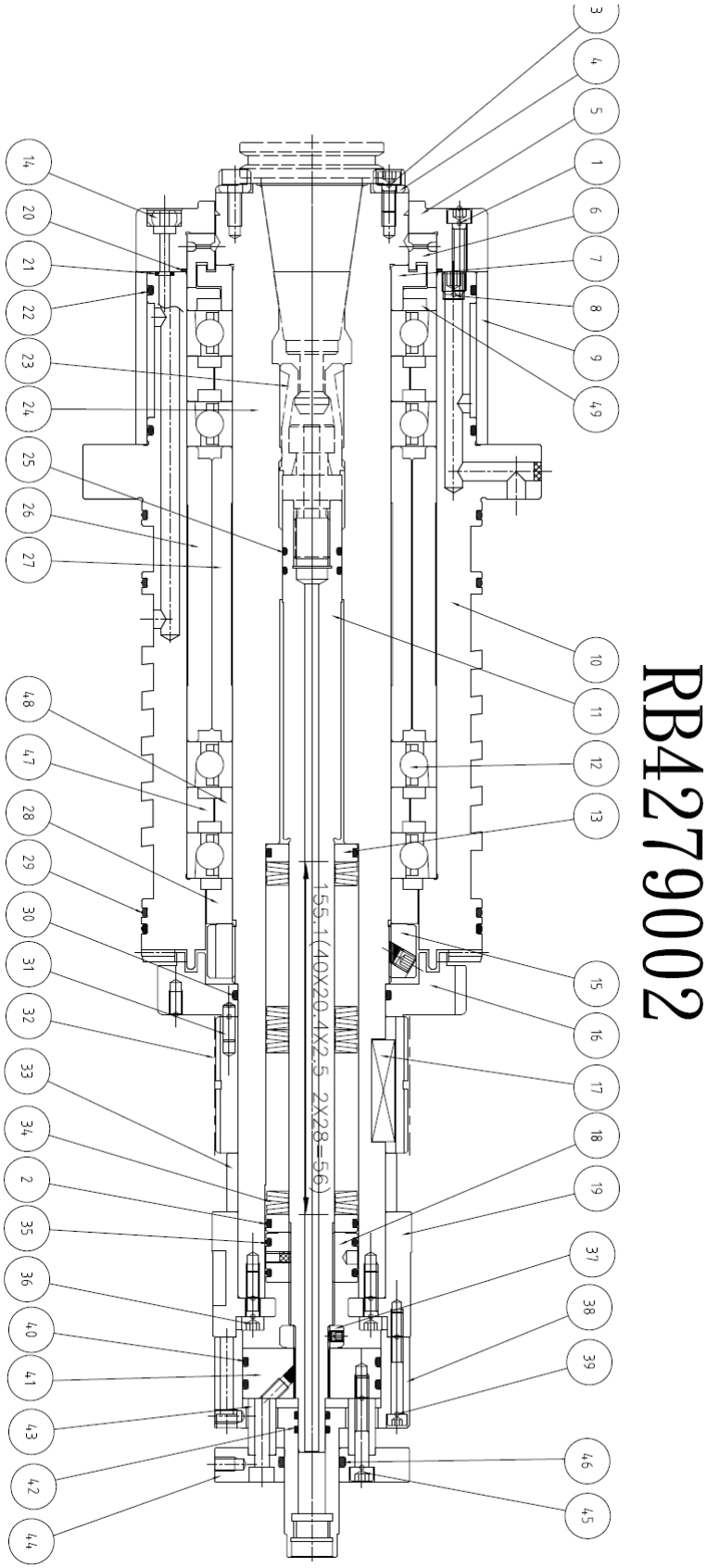
RB4279002
155.1(40X20.4X2.5 2X28=56)

Item	NAME	SIZE	ORDER NUMBER	Qty
1	Hex Socket-Head Screw	M6xP1.0x30	D0000040301	6
10	Spindle	R2059A	A0001000600	1
11	Pull Stud	R1122D	A0001000700	1
12	Steel Bearing	70BNR10STYNDUELP4	C0088005300	2
13	Washer	R0013C	A0001000800	2
14	Blot	SNA4(90101)	A0001002700	6
15	Nut	YSF M70*P2	C0088005100	1
16	Collar	R1266A	A0001000900	1
17	Round Key	R4180B	A0001001000	1
18	Nut	R1314B	A0001001100	1
19	Sensor Ring	R1152E	A0001001200	1
2	O-Ring	ID29.7,W3.5	C0062000113	2
20	O-Ring	ID107.67,W1.78	C0062000160	1
21	O-Ring	ID4.8,W1.9	C0062000151	7
22	O-Ring	ID134.4,W3.1	C0062000152	2
23	Collect	BT40-45°(90003)	A0001002800	1
24	Shaft	R8419A	A0001002900	1
25	O-Ring	ID21.8,W2.4	C0062000153	2
26	Collar	R5198A	A0001001500	1
27	Collar	R5199A	A0001001600	1
28	Collar	R1114A	A0001001700	1
29	O-Ring	ID139.4,W3.1	C0062000154	4
3	Hex Socket-Head Screw	M6xP1.0x20	D0000040231	2
30	O-Ring	ID64.4,W3.1	C0062000155	1
31	Spring Pin	φ5x16	C0088005400	2
32	Belt Pulley	R1265B	A0001001800	1

Item	NAME	SIZE	ORDER NUMBER	Qty
33	Bush	R1267A	A0001001900	1
34	Disk Spring	40*20.4*2.5	C0088005500	4
35	O-Ring	ID34.7,W3.5	C0062000156	1
36	Hex Socket-Head Screw	M6xP1.0x35	D0000040351	2
37	Nut	YSR M16*P1.5	C0088005200	1
38	Adapter Seat	R1033D	A0001002000	1
39	Hex Socket-Head Screw	M5xP0.8x45	D0000030451	56
4	Fixed Key	R0021B	A0001000100	2
40	O-Ring	ID51.6,W5.7	C0062000157	8
41	Nut	R1034C	A0001002100	1
42	O-Ring	ID11.8,W2.4	C0062000158	1
43	Bracket	R1035B	A0001002200	6
44	Cylinder Seat	R1032D	A0001002300	2
45	Hex Socket-Head Screw	M6xP1.0x40	D0000040401	1
46	O-Ring	ID23.4,W3.1	C0062000159	2
47	Collar	R0010A	A0001002500	4
48	Collar	R0008B	A0001002400	1
49	Collar	R5054A	A0001002400	4
5	Cover	R2062A	A0001000200	1
6	Collar	R0006B	A0001000300	2
7	Collar	R5055A	A0001002600	2
8	Plug	PT1/8	C0062000112	1
9	Jacketing	R1271A	A0001000500	1

7. MAGAZINE

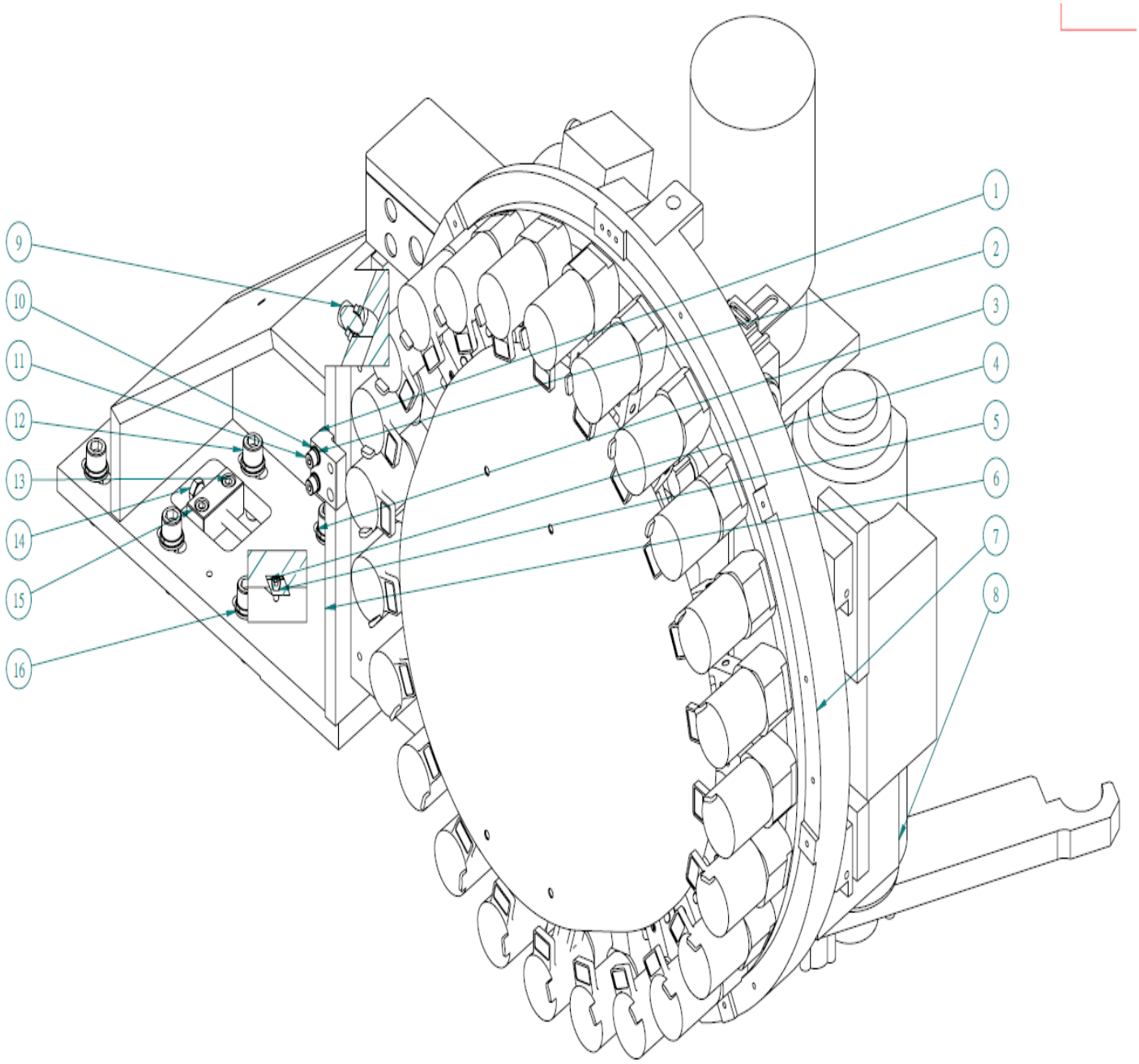

No.	PART NO.	PART NAME	SPECIFICATION	Q'TY	UNIT
1	A2084000300	Interface Seat Adjustment Block	45Lx45Wx24H	1	EA
2	D0010051301	Washer	M8	2	EA
3	D0011090026	Spring Washer	M16	10	EA
4	A0184000400	Double head round keys	35Lx15Wx10H	2	EA
5	D0000040126	Hexagon Socket Head Cap Screws	M6xP1.0x12L	2	EA
6	C2084000200	Interface Seat	485Lx420Wx225H	1	EA
7	C2084003000	Turntable Tool Magazine	MR4AKF411D01-01	1	EA
8	C2084000800	Automatic Tools Changer	65°/1:10/220V/42DEXA101A	1	SET
9	D0000080401	Hexagon Socket Head Cap Screws	M14xP2.0x40	4	EA
10	D0011050146	Spring Washer	M8	2	EA
11	D0000050406	Hexagon Socket Head Cap Screws	M8xP1.25x45L	2	EA
12	D0000090556	Hexagon Socket Head Cap Screws	M16xP2.0x55L	6	EA
13	D0000060306	Hexagon Socket Head Cap Screws	M10xP1.5x30L	2	EA
14	D0023070906	Hexagon Bolts	M12xP1.75x90L	1	EA
15	A2084000100	Interface Seat Adjustment Block	70Lx30Wx30H	1	EA
16	D0010092401	Washer	M16	10	EA

1. Main Body

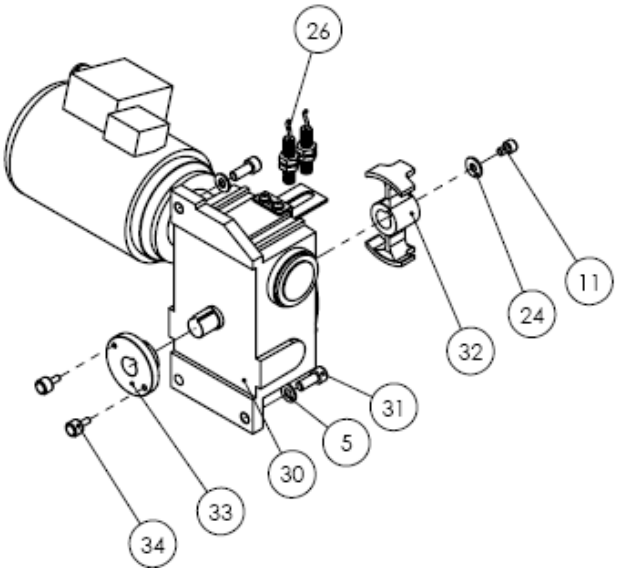
26
11
24
32
31
5
30
33
34

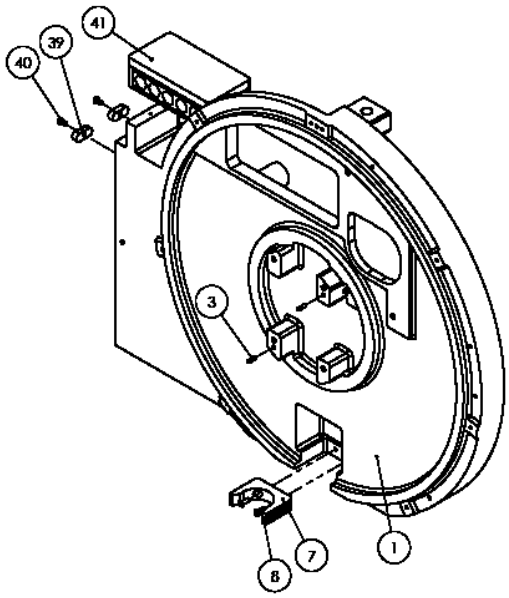
41
39
40
3
8
7
1

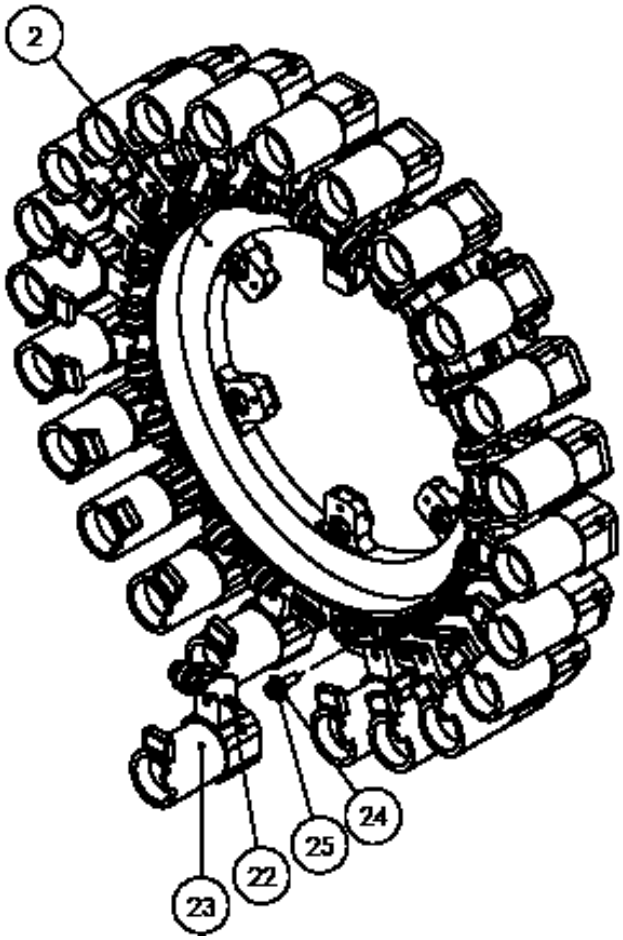
2
23
22
25
24

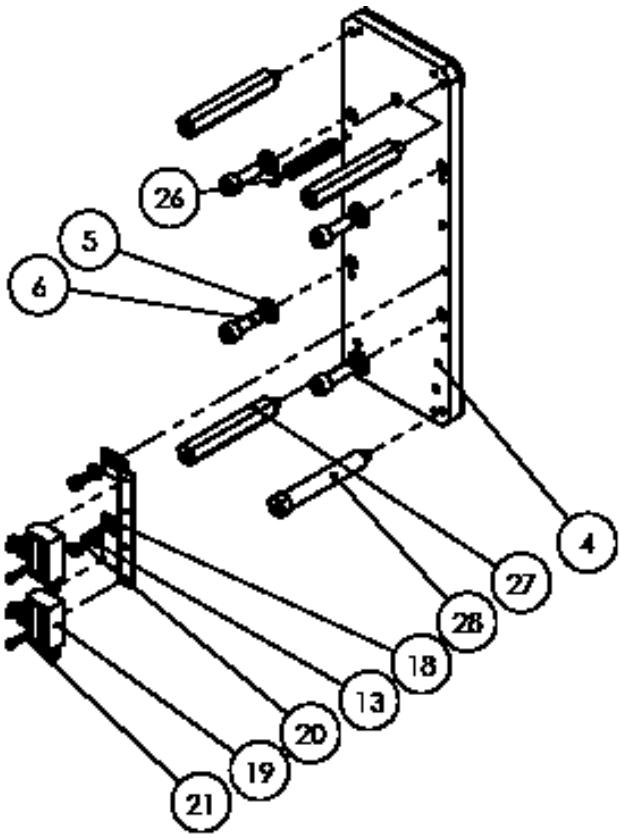
26
5
6
4
27
28
18
13
20
19
21

2. Cylinder Mounting Plate

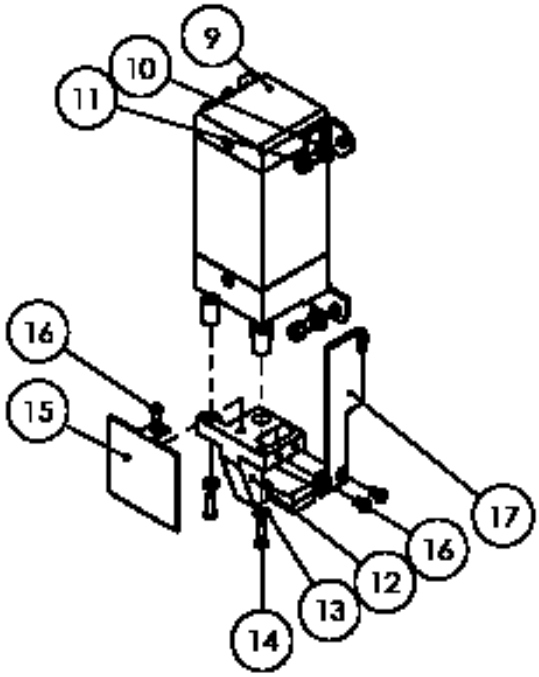

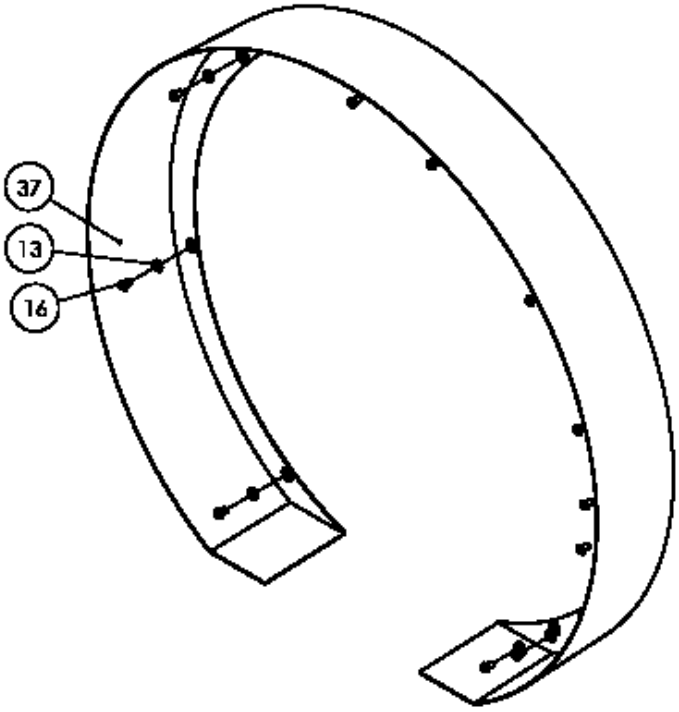

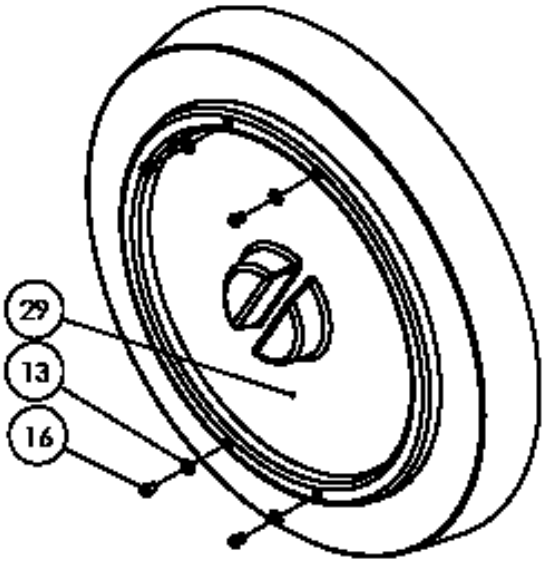

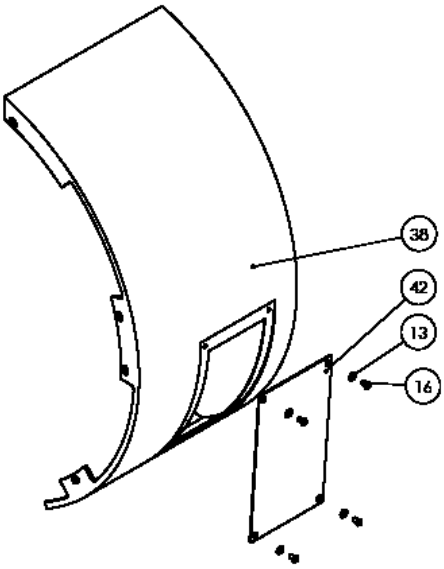

ITEM NO.	QTY.	MATERIAL	TITLE-C	TITLE-E	NOTE
1	1	FC30	刀庫本體	Main Body	
2	1		刀盤組	Tool disk molule	
3	2		平行銷	Paralle Pin	
4	1		壓缸固定鈑組	Cylinder Mounting Plate Module	
5	7		平墊圈	Finished Circular Plain Washer	
6	4		內六角承窩頭螺栓	Hexagon Socket Heard Screw	
7	1	尼龍6+碳纖維40%	倒刀定位座	POCKET POSITIONING SEAT	
8	2		圓頭內六角承窩頭螺絲	Hexagon Socket Button Head Screw	
9	1	市購品	倒刀壓缸	Pneumatic Cylinder	
10	4		平墊圈	Finished Circular Plain Washer	
11	5		內六角承窩頭螺栓	Hexagon Socket Heard Screw	
12	1	S45C	倒刀塊	TOOL TILT BLOCK	
13	26		平墊圈	Finished Circular Plain Washer	
14	2		圓頭內六角承窩頭螺絲	Hexagon Socket Button Head Screw	
15	1	SS41(2t)	倒刀蓋鈑	Cover Plate	
16	24		圓頭內六角承窩頭螺絲	Hexagon Socket Button Head Screw	
17	1	SS41(4t)	極限開關碰塊	Limit Switch Sensing Dog	
18	1	SS41	極限開關固定鈑	LIMIT SWITCH BLOCK	
19	2	YAMAATAKE(LS1-A)	極限開關	LIMIT SWITCH	
20	2		內六角承窩頭螺栓	Hexagon Socket Heard Screw	
21	4		內六角承窩頭螺栓	Hexagon Socket Heard Screw	
22	24	S45C	刀套固定桿	Shaft	
23	24		BT40刀套(65度)	Pocket	
24	25	市購品	墊片	Washer	
25	24		內六角承窩頭螺栓	Hexagon Socket Heard Screw	
26	3	市購品	近接開關	Proximity Sensor	
27	3	SS41	前蓋支撐桿	Support Rod	
28	1	六角鐵	前蓋支撐桿	Support Rod	
29	1	SS41	壓缸前蓋	COVER	
30	1	市購品	渦輪減速機馬達(220V)	Worm Gear Motor(220V)	
31	3		內六角承窩頭螺栓	Hexagon Socket Heard Screw	
32	1	SS41	定位感應片	SS41	
33	1	S45C	驅動軸	Tool Disk Driver	
34	2	CF6	曲線滾輪	ROLLER	
37	1	ABS	刀庫前外罩	Mag. font cover	
38	1	FRP	刀庫後外罩	Mag. after cover	
39	2	S45C	承靠塊	Positioning Key	
40	2		圓頭內六角承窩頭螺絲	Hexagon Socket Button Head Screw	
41	1	PS-1809-6	CE 電控盒	CE ELECTRIC BOX	
42	1	壓克力	鈑金視窗	WINDOW	

3. Tool disk

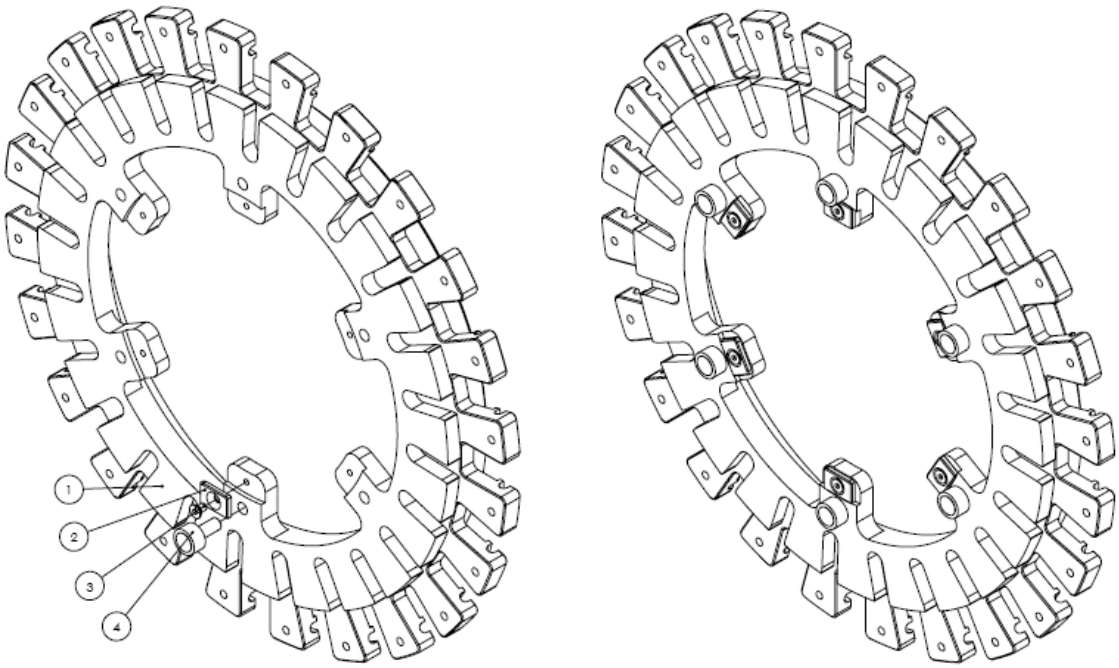

ITEM NO.	QTY.	MATERIAL	TITLE-C	TITLE-E	NOTE
1	1	FC30	刀盤	Tool Disk	
2	6	POM聚縮醛樹脂CL-500CL	耐磨片(I)	Wear resistant Strip(I)	
3	6		內六角皿頭螺栓	Socket Countersunk Head Screw	
4	6	CF10	曲線滾輪軸承	ROLLER	

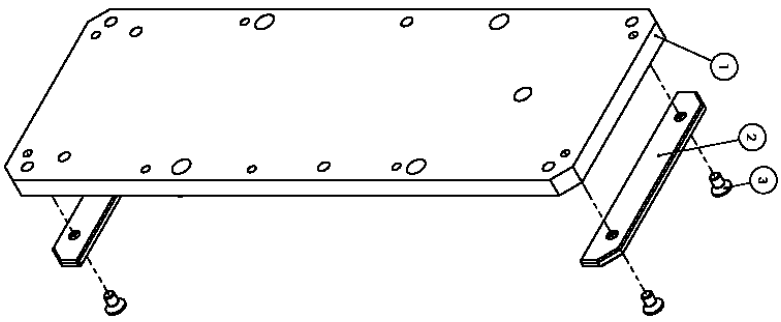

ITEM NO.	QTY.	MATERIAL	TITLE-C	TITLE-E	NOTE
1	1	SS41	壓缸固定鈑	Cylinder Mounting Plate	
2	2	UP	耐磨片(II)	Wear resistant Strip(II)	
3	4		內六角皿頭螺栓	Socket Countersunk Head Screw	

4. Arm Body.

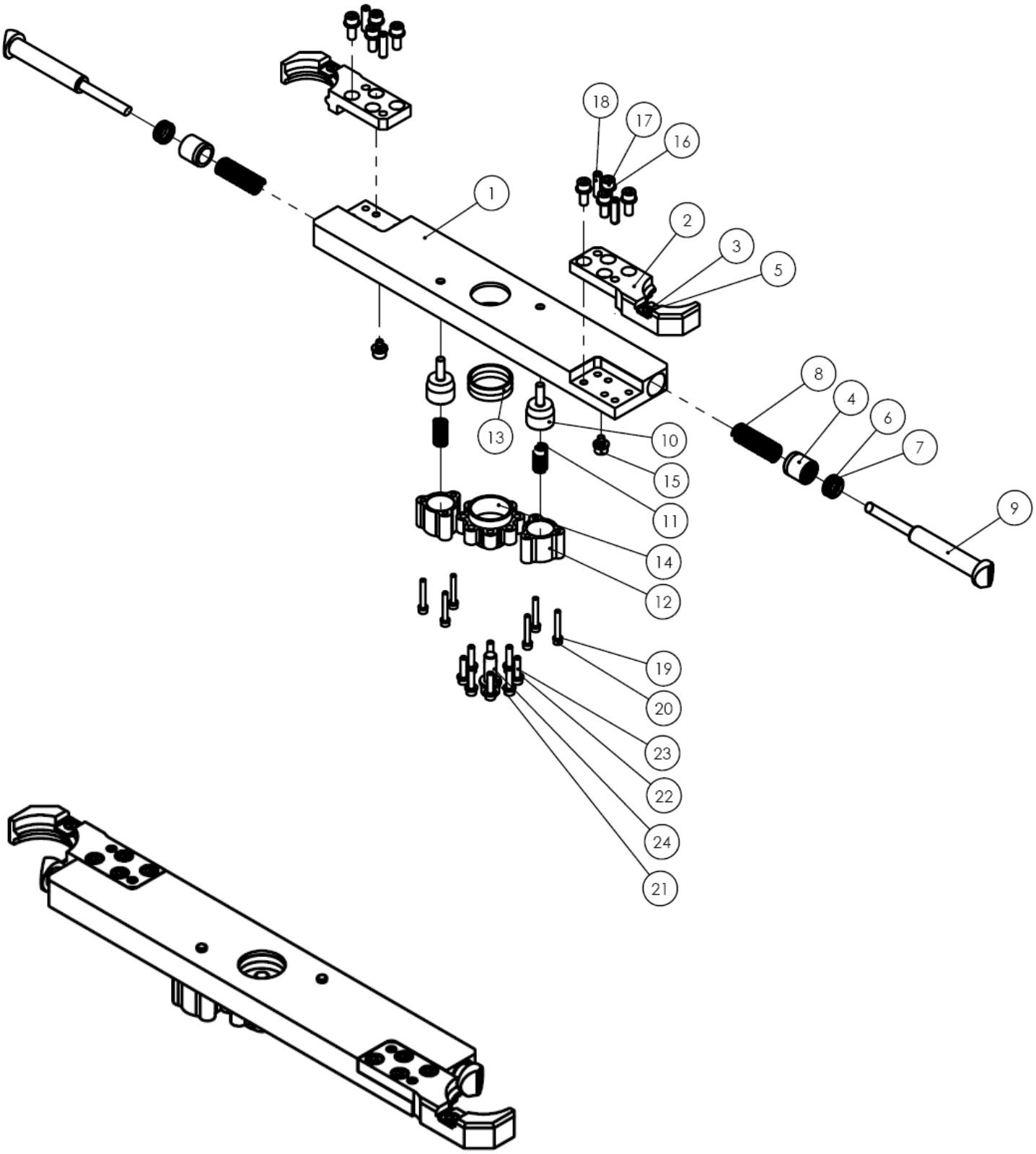

ITEM NO.	PART NO.	QTY.	MATERIAL	TITLE-C	TITLE-E	NOTE
1	A40C-0001B08	1	SS41	刀臂本體	MAIN BODY	
2	A40C-0002A03	2	S50C	扣刀爪	Gripper(BT)	
3	A40C-0004A01	2	S45C	定位鍵	KEY(BT,CAT,DIN)	
4	A40C-0020A06	2	粉末冶金	銅套	COPPER COVER	
5	M5XP0.8X12L	2		內六角皿頭螺栓	Socket Countersunk Head Screw	
6	OR0000000P18	2	P18	O型環	O-RNIG	
7	OT00000SER18	2	SER-18	刮刷環	SEAL	
8	A40C-0007A02	2	SWPB	頂刀爪彈簧	FINGER SPRING	
9	A40C-0003B06	2	S50C	頂刀爪(R265)	Finger	
10	A40C-0005A03	2	S45C	安全頂銷	SAFETY PIN	
11	A40C-0008A02	2	SWPB	安全頂銷彈簧	PIN SPRING	
12	A40C-0006A04	2	SS41	彈簧蓋鈑	SPRING COVER	
13	CX0000d40D45	2		迫緊環	TAPER SNAP RING	
14	A40C-0009A03	1	SCM4	迫緊環蓋	COX COVER	
15	A40C-0013A03	2	市購品	頂刀爪限位銷	SKT,HD,CAP SCR	
16	M8	10		彈簧墊圈	Spring Lock Washer	
17	M8XP1.25X20L	8		內六角承窩頭螺栓	Hexagon Socket Heard Screw	
18	M8x28L	4		彈簧銷	Spring Pin	
19	M5	6		彈簧墊圈	Spring Lock Washer	
20	M5XP0.8X35L	6		內六角承窩頭螺栓	Hexagon Socket Heard Screw	
21	M12	1		彈簧墊圈	Spring Lock Washer	
22	M6	8		彈簧墊圈	Spring Lock Washer	
23	M6XP1X25L	8		內六角承窩頭螺栓	Hexagon Socket Heard Screw	
24	M12XP1.75X35L	1		內六角承窩頭螺栓	Hexagon Socket Heard Screw	

5. Cam Box

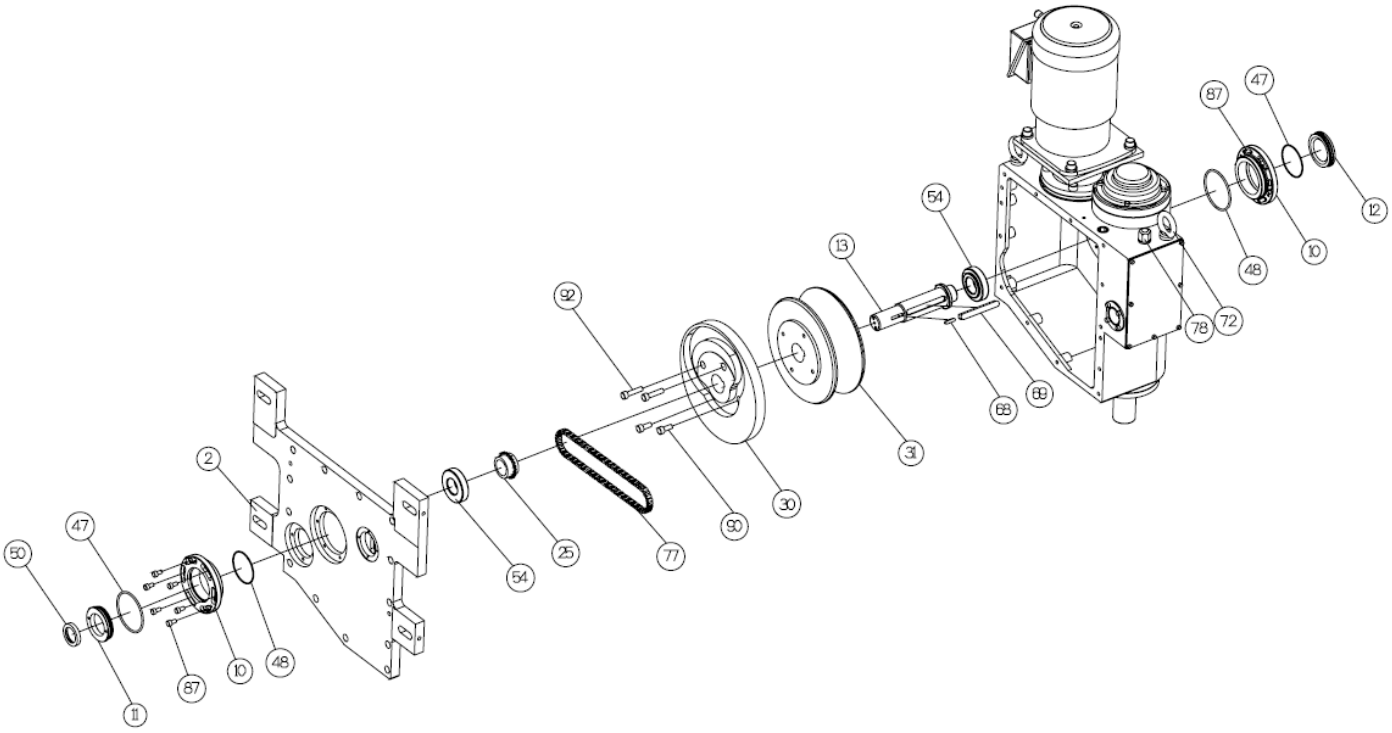

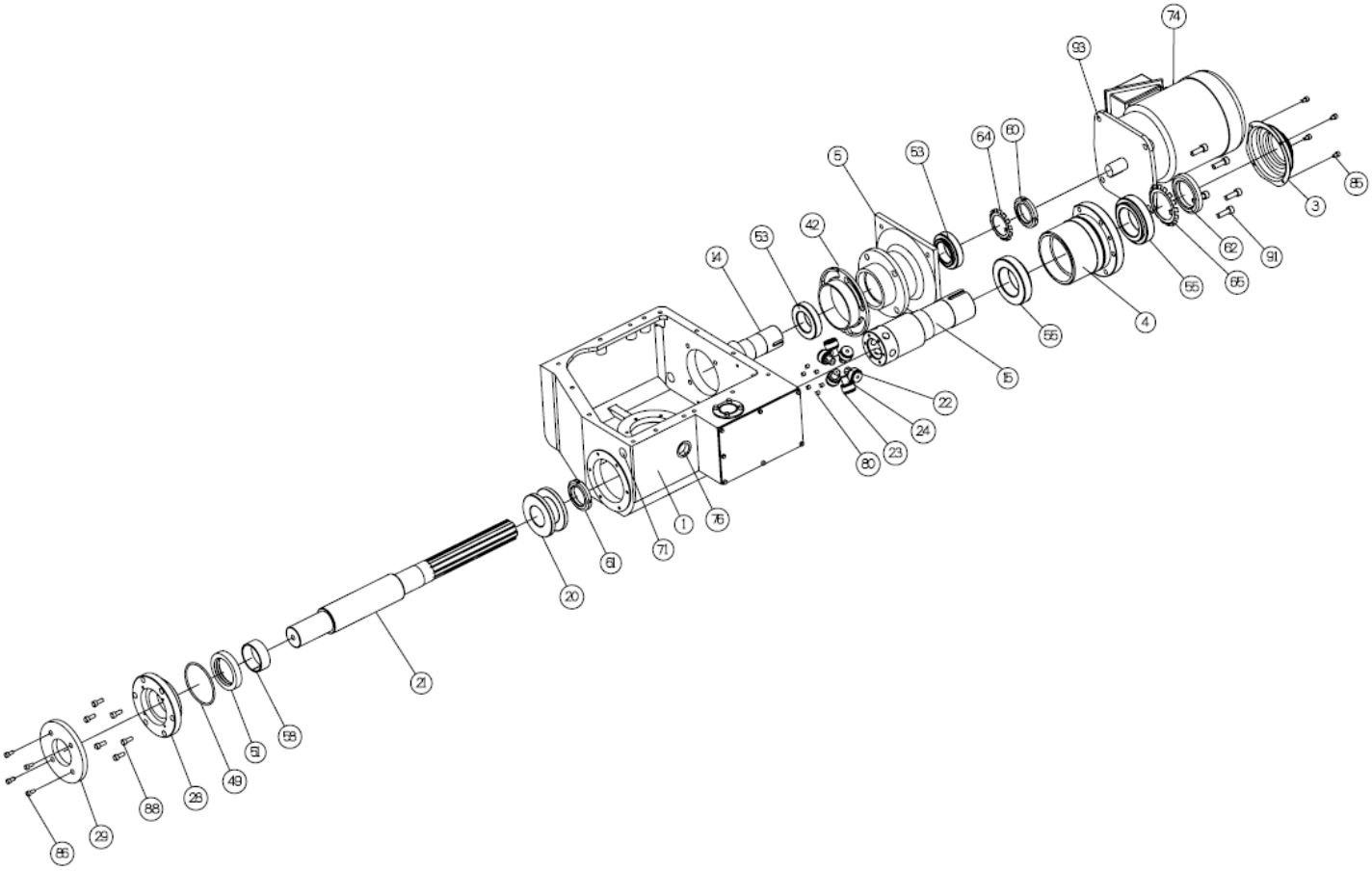
74
93
64
60
5
53
3
85
53
42
14
62
91
55
65
4
56
15
22
24
23
80
1
76
71
81
20
21
58
51
49
28
88
29
85

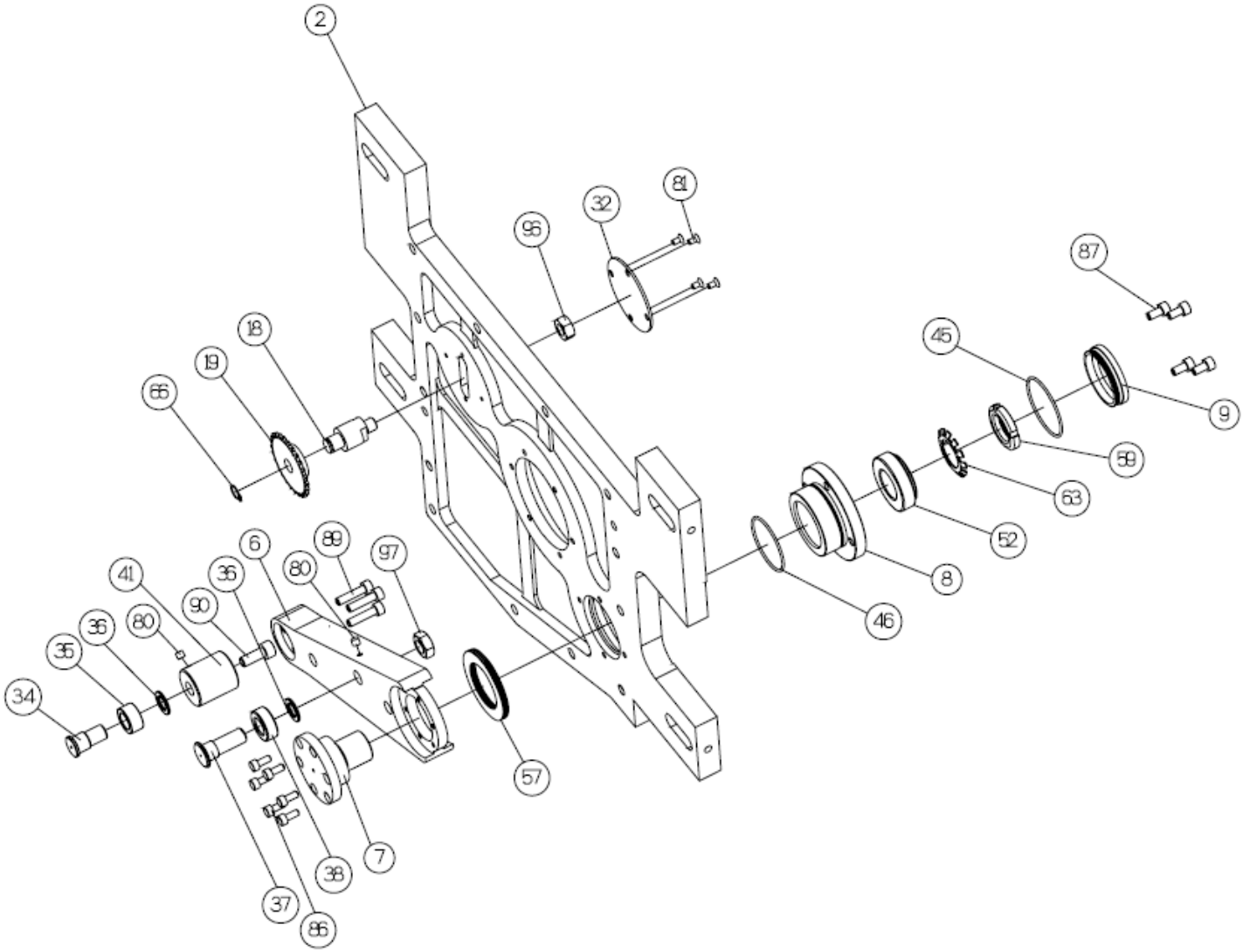
2
81
32
95
87
18
19
45
66
9
59
63
52
6
89
97
41
36
80
8
90
46
36
80
35
34
57
7
38
37
86

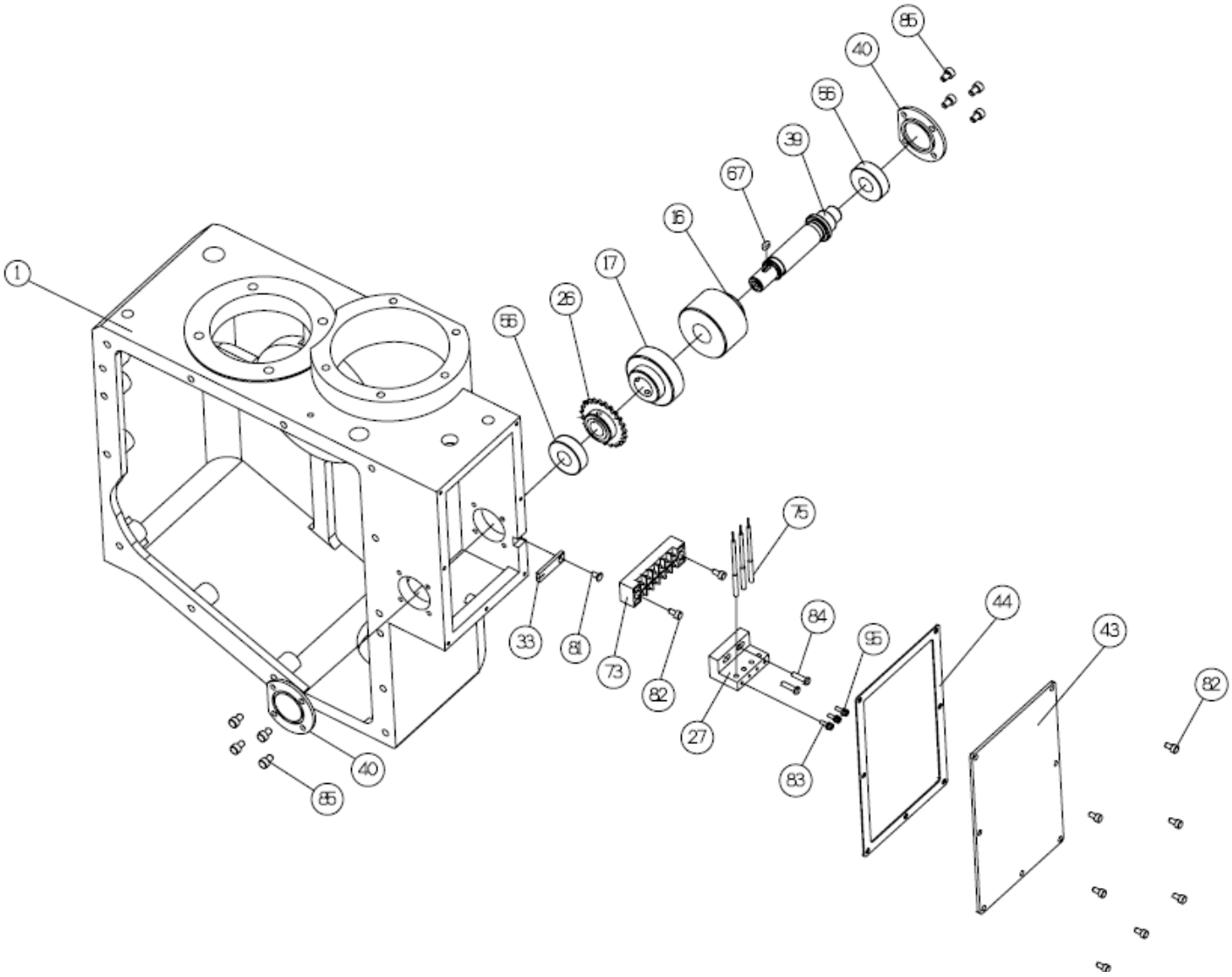
85
40
56
39
67
16
17
26
56
1
75
84
95
44
43
82
33
81
73
82
27
83
40
85

NO.	Parts No.	Specification	Q'TY	NO.	Parts No.	Specification	Q'TY
1	A01-001	Cambox	1	25	A01-023	Chain Wheel	1
2	A01-002	Box Cover	1	26	A01-024	Chain Wheel	1
3	A01-003	Cover	1	27	A01-025	Proximity Switch Holder	1
4	A01-004	Bearing Bracket	1	28	A01-126	Shaft Bracket	1
5	A01-005	Motor Bracket	1	29	A01-027	Flange	1
6	A01-006	Move Arm	1	30	A01-028	Plate Cam	1
7	A01-007	Arm Shaft	1	31	A01-029	Roller Gear Cam	1
8	A01-008	Arm Bracket	1	32	A01-031	Cover	1
9	A01-009	Cover	1	33	A01-032	Position indicator	1
10	A01-010	Bearing Bracket	2	34	A01-033	Needle Bearing	1
11	A01-011	Cover	1	35	A01-133	Ring	1
12	A01-012	Cover	1	36	A01-233	Washer	2
13	A01-013	Cam Shaft	1	37	A01-034	Needle Bearing	1
14	A01-014	Driving Gear	1	38	A01-134	Ring	1
15	A01-015	Turret	1	39	A01-035	Dog Shaft	1
16	A01-016	Checking Dog	1	40	A01-036	Cover	2
17	A01-017	Braking Dog	1	41	A01-037	Needle Bearing Holder	1
18	A01-018	Idle Wheel Shaft	1	42	A01-038	Adjusting Ring	1
19	A01-019	Idle Wheel	1	43	A01-040	Cover	1
20	A01-020	Fork	1	44	A01-052	Rubber Seal	1
21	A01-021	Spling Shaft	1	45	AS031	O Ring	1
22	A01-022	Needle Bearing	6	46	AS033	O Ring	1
23	A01-122	Ring	6	47	AS035	O Ring	2
24	A01-222	Washer	6	48	G75	O Ring	2

NO.	Parts No.	Specification	Q'TY
49	G80	O Ring	1
50	TC30427	Oil Seal	1
51	TB4 507212	Oil Seal	1
52	32005	Roller Bearing	1
53	32008	Roller Bearing	2
54	30206	Roller Bearing	2
55	32011	Roller Bearing	2
56	6202ZZ	Ball Bearing	2
57	NTB40603	Thrust Bearing	1
58	LBB5020	Bearing	1
59	AN05	Locking Nut	1
60	AN08	Locking Nut	1
61	AN08	Locking Nut	1
62	AN11	Locking Nut	2
63	AW05	Washer	1
64	AW08	Washer	1
65	AW11	Washer	1
66	S12	Ring	1
67	4x8x4mm	Key	1
68	5x20x5mm	Key	1
69	10x85x8mm	Key	1
70	#6x38L	Taper Pins	2
71	1/2"10L	OIL Plug	2
72	M12	Hook Ring	2
97	M12xP1.5	Nut	1

NO.	Parts No.	Specification	Q'TY
73	6P	Terminal Block	1
74	3/4HP	Motor	1
75	E2E-CR8B1	Sensor	3
76		Oil Gauge	1
77	RS25x597L(94)	Chain	1
78	M15x1.5	Cable Gland	1
79	M5x6	Set Screw	5
80	M6x5	Set Screw	14
81	M4x6	Screw	5
82	M4x8	Screw	9
83	M4x10	Screw	3
84	M4x16	Cable Gland	2
85	M5x8	Set Screw	12
86	M5x12	Set Screw	10
87	M6x12	Screw	16
88	M6x16	Screw	6
89	M6x25	Screw	3
90	M8x20	Screw	3
91	M8x25	Screw	18
92	M8x35	Screw	2
93	M10x25	Screw	4
94	M10x30	Screw	4
95	M4XP0.7	Nut	3
96	M10xP1.25	Nut	1

8. Pneumatic System

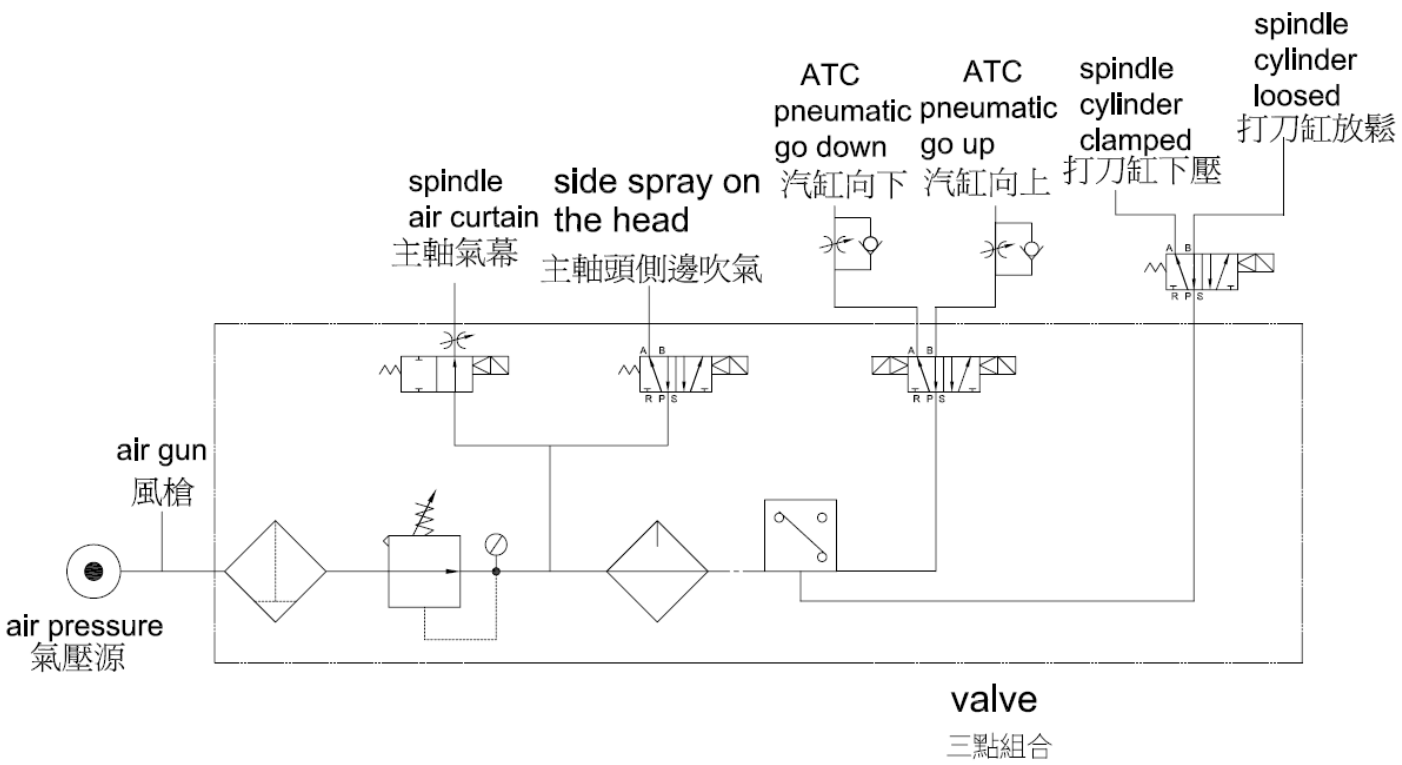

Air Unit Layout

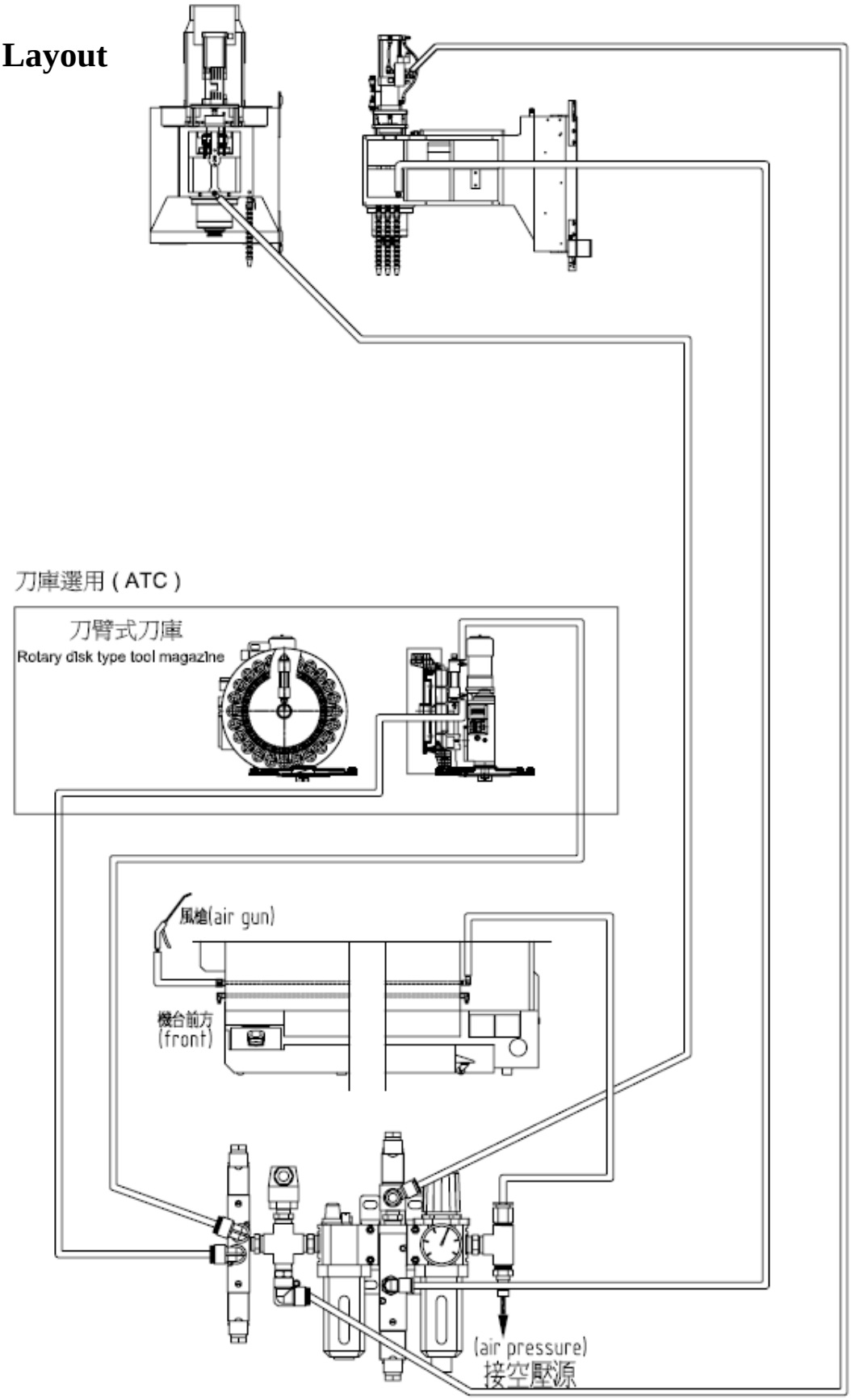

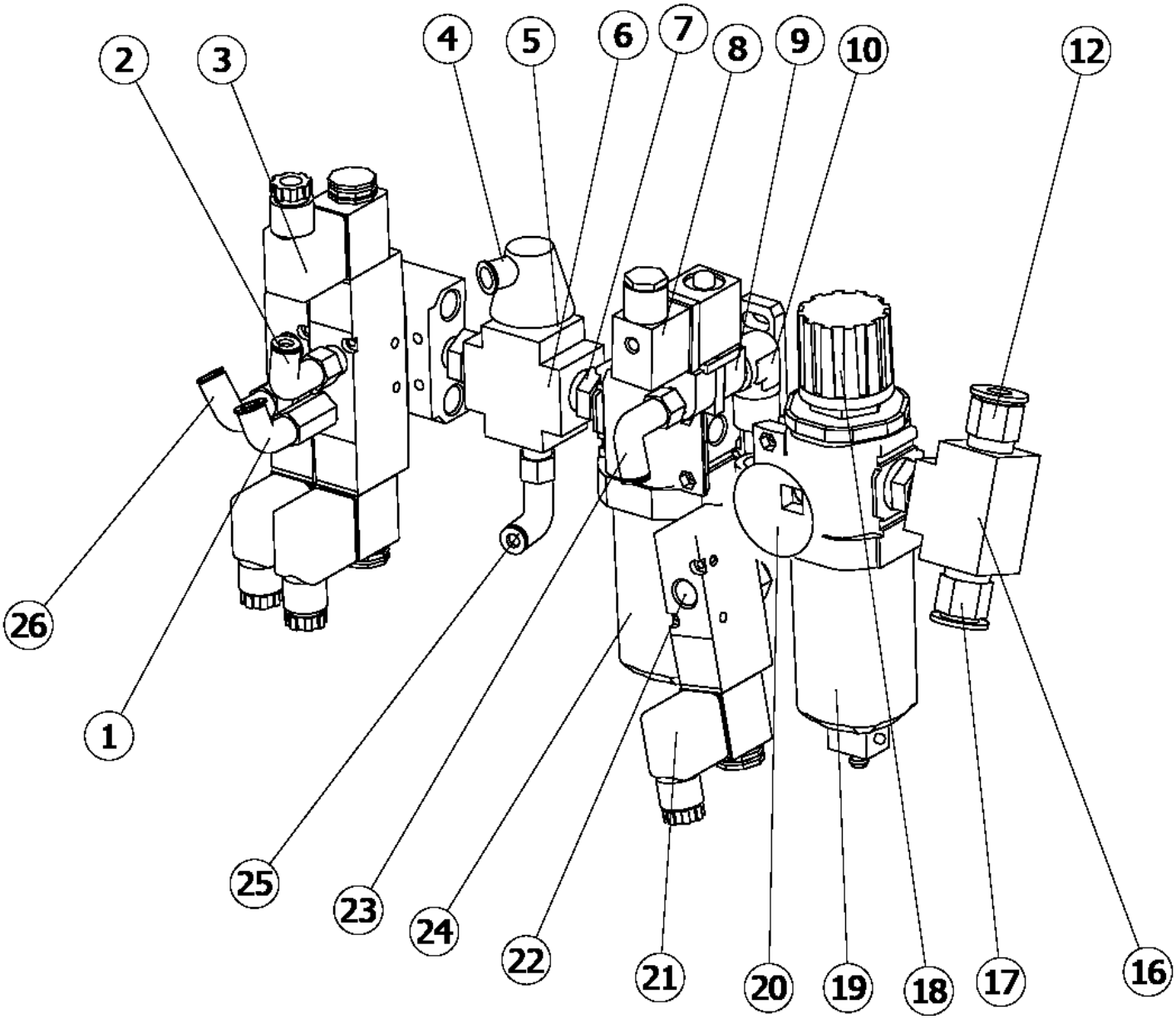
2
3
4
5
6
7
8
9
10
12
26
1
25
23
24
22
21
20
19
18
17
16

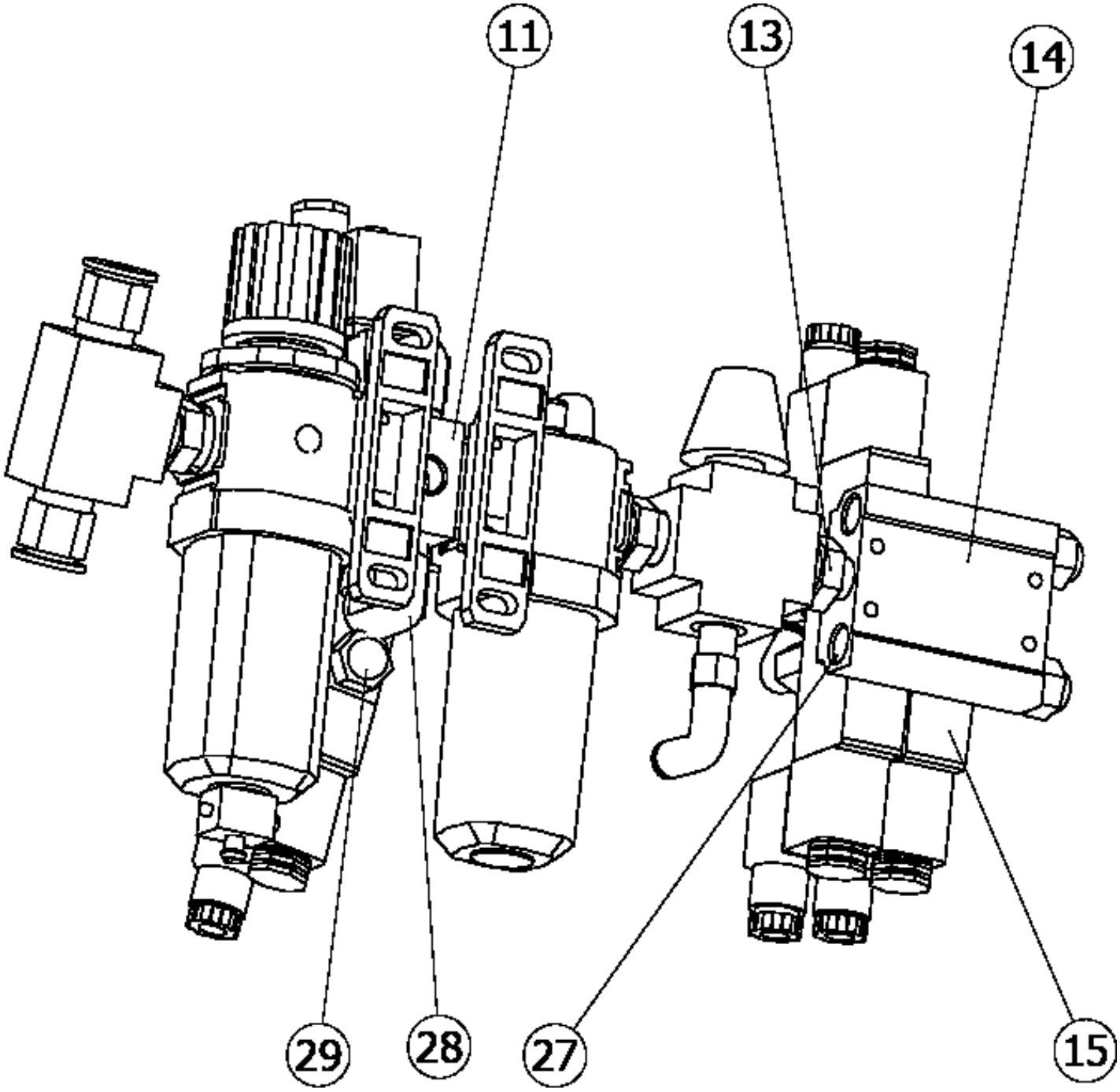
11
13
14
29
28
27
15

Item	Name	Size	Qty.
1	Elbow Quick Coupling	⌀10mm_1/4"	1
2	Elbow Quick Coupling	⌀10mm_1/4"	1
3	Solenoid	1/4" 五口二位_雙電控	1
4	Air Pressure Switch	1/4"	1
5	Reducing Bush	1/4"x3/8"	3
6	Cross Joint	3/8"	1
7	Hex. Double Joint	3/8"	1
8	Solenoid	1/4" 二位二通	1
9	Hex. Double Joint	1/4"	1
10	Elbow Hex. Double Joint	1/4"	2
11	Adapter	MACP300 T10	1
12	Straight Quick Coupling	⌀10mm_3/8"	1
13	Straight Coupling	1/4"T*3/8"T	1
14	Control Valve Seat	1/4"*2 聯	1
15	Solenoid	MUSC-220-4E1-DC24 附燈	1
16	T-Joint	3/8"	1
17	Quick Coupling	⌀12mm_3/8"	1
18	Pressure Control Valve	MACP300-12A	1
19	Filter Regular Unit	MACP300-12A	1
20	Pressure Display	1.5" 10KG/PSI	1
21	Solenoid	3/8" 三口二位_單電控	1
22	Elbow Quick Coupling	⌀8mm_3/8"	1
23	Speed Control Joint	⌀8mm_1/4"	1
24	Lubricator Regular Unit Seat	55cc MACP300-12A	1
25	Elbow Quick Coupling	⌀10mm_3/8"	1
26	Quick Coupling	⌀10mm_1/4"*90°	1
27	Hex. Socket plug	1/4"	4
28	Elbow Hex. Double Joint	3/8"	1
29	Silencer	1/4"	3

Chapter 8

APPENDIX

1. Replacing fuse on control unit

⚠ **WARNING**

Before replacing a blown fuse, locate and remove the cause of the blown fuse.
For this reason, only those personnel who have received approved safety and maintenance training may perform this replacement work.
When opening the cabinet and replacing a fuse, be careful not to touch the high-voltage circuits (marked ⚠ and fitted with an insulating cover).
Touching the uncovered high-voltage circuits presents an extremely dangerous electric shock hazard.

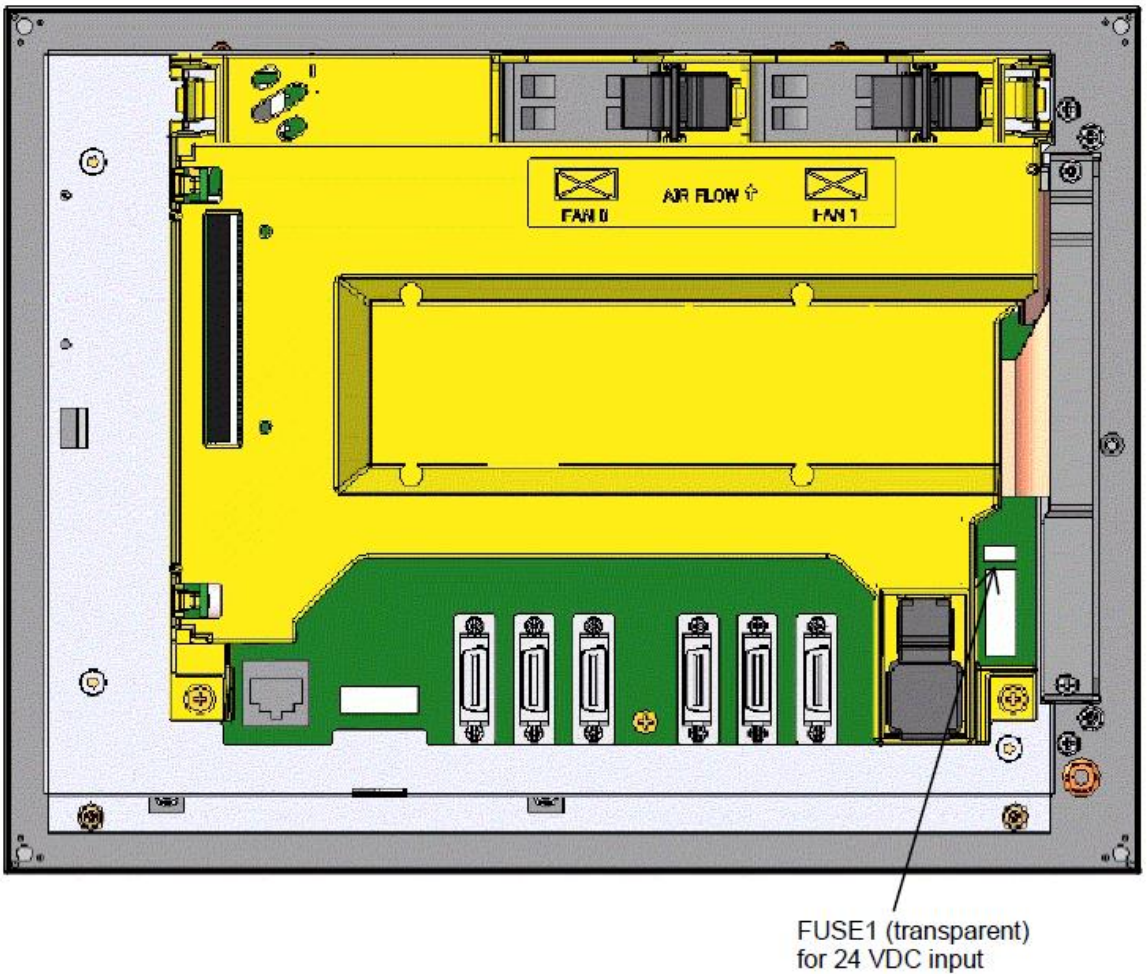
FAN 0
AIR FLOW
FAN 1
FUSE1 (transparent)
for 24 VDC input

2. Replacing battery

Offset data, and system parameters are stored in SRAM in the control unit. The power to the SRAM is backed up by a lithium battery mounted on the front panel of the control unit. The above data is not lost even when the main battery goes dead. The backup battery is mounted on the control unit at shipping. This battery can maintain the contents of memory for about a year.

When the voltage of the battery becomes low, alarm message "BAT" blinks on the display and the battery alarm signal is output to the PMC. When this alarm is displayed, replace the battery as soon as possible. In general, the battery can be replaced within two or three weeks, however, this depends on the system configuration.

If the voltage of the battery becomes any lower, memory can no longer be backed up. Turning on the power to the control unit in this state causes system alarm to occur because the contents of memory are lost. Clear the entire memory and reenter data after replacing the battery.

FANUC thus recommends that the battery be replaced periodically, once a year, regardless of whether a battery alarm is issued.

The following two kinds of batteries can be used.

- Lithium battery built into the CNC control unit.
- Two alkaline dry cells (size D) in the external battery case.

NOTE

A lithium battery is installed as standard at the factory.

2.1 When a lithium battery is used
- Replacement procedure

Prepare a new battery unit (ordering code: A02B–0309–K102).

(1) Turn on the power to the CNC. After about 30 seconds, turn off the power.

(2) Extract the old battery unit from the lower right of the rear of the CNC unit. (Hold the latch of the battery unit, and extract the unit upward while releasing the claw from the case.)

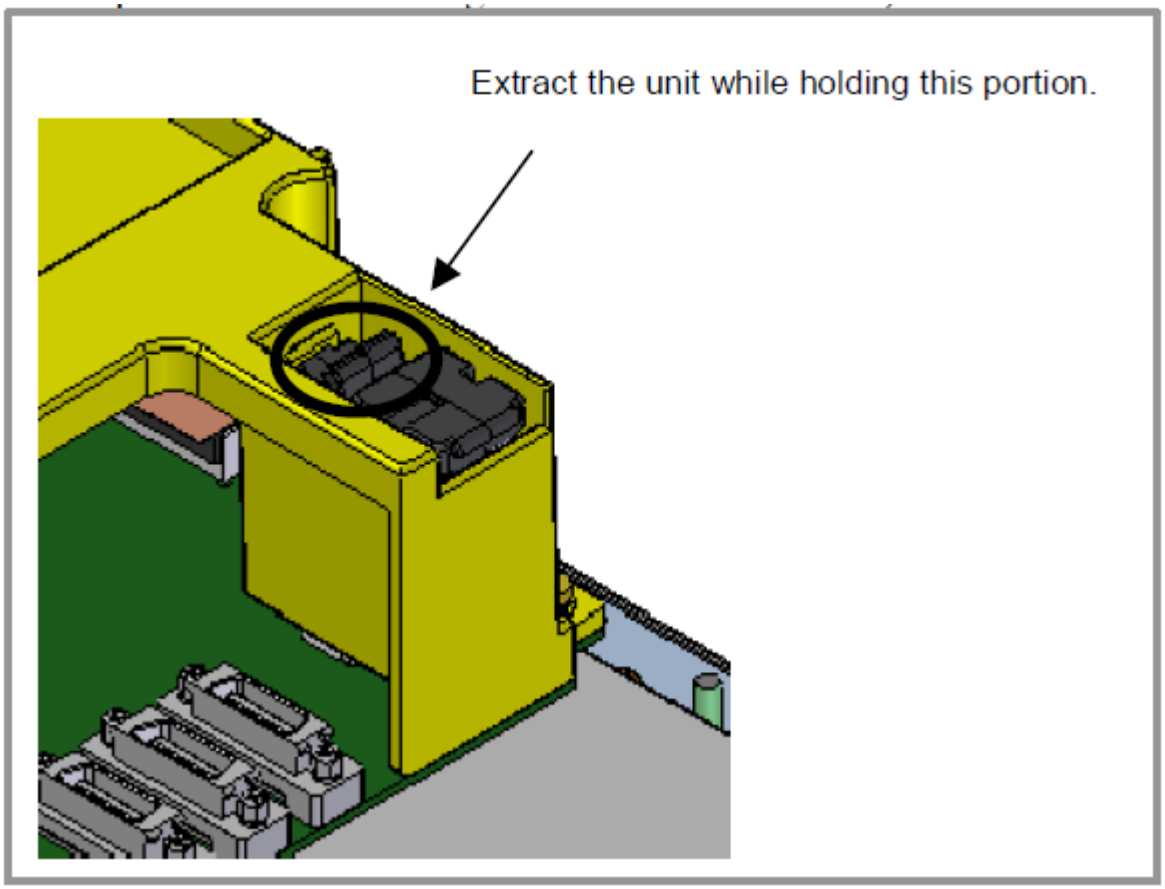

(3) Mount the new battery unit. (Push the battery unit in until the claw is latched into the case.) Ensure that the latch is engaged securely.

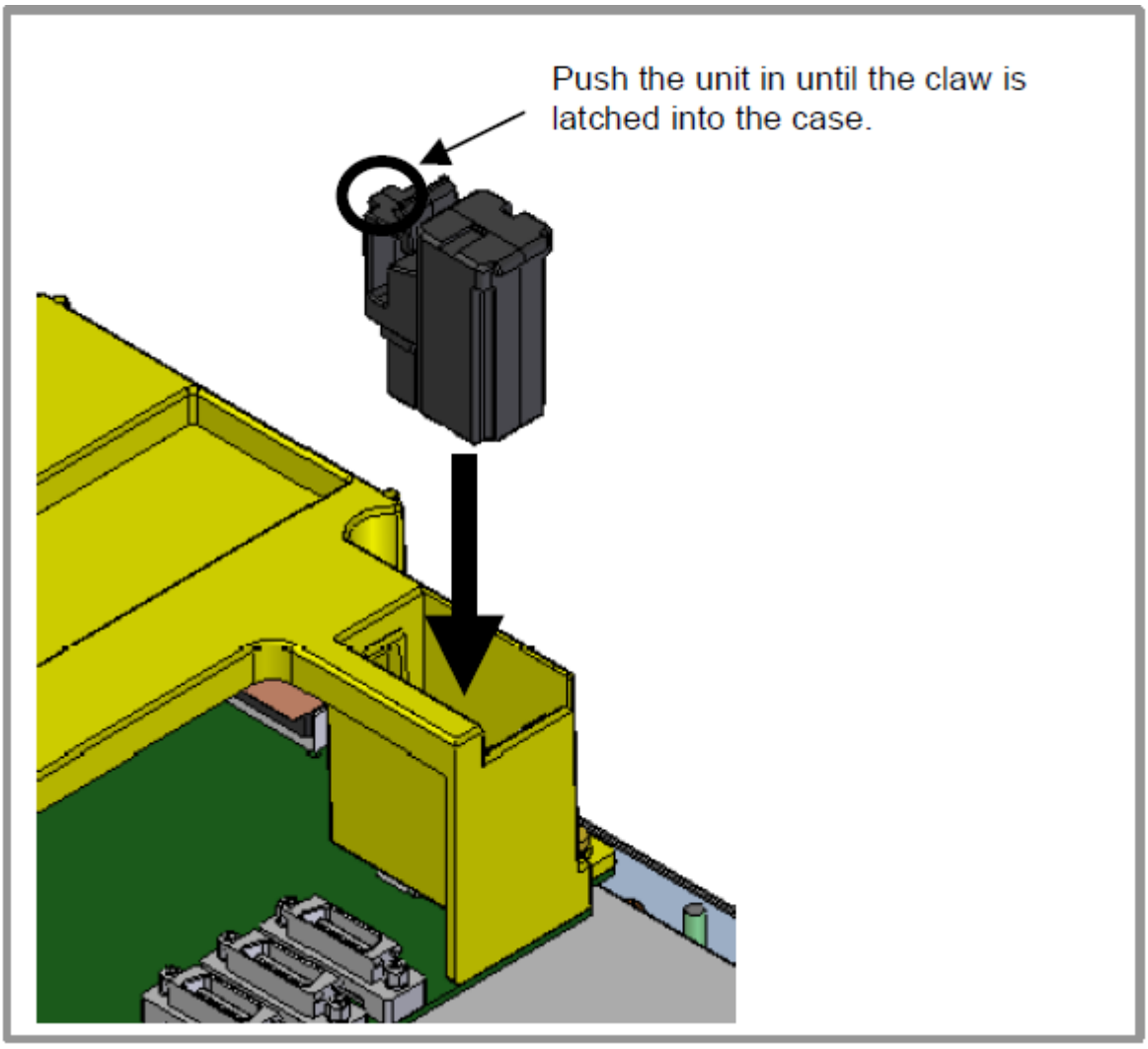

⚠ WARNING

Using other than the recommended battery may result in the battery exploding. Replace the battery only with the specified battery (A02B-0309-K102).

⚠ CAUTION

Steps 1 to 3 should be completed within 30 minutes. Do not leave the control unit without a battery for any longer than the specified period. Otherwise, the contents of memory may be lost.
If steps 1 to 3 may not be completed within 30 minutes, save all contents of the SRAM memory to the memory card beforehand. Thus, if the contents of the SRAM memory are lost, the contents can be restored easily.
See Chapter 3 or Appendix C for explanations about how to save the contents of the SRAM memory.

When discarding a battery, observe the applicable ordinances or other rules of your local government. In addition, cover the exposed pins with tape or other insulation materials to prevent a short circuit before discarding the battery.

2.2 When alkaline dray cells (size D) are used

- Replacing the battery

(1) Prepare two new alkaline dry cells (size D).
(2) Turn on the power of the control unit.
(3) Remove the battery case cover.
(5) Replace the batteries, paying careful attention to their orientation.
(6) Replace the battery case cover.

> ⚠ **CAUTION**
> To replace the battery when the power is off, follow the same procedure as that for the replacement of a lithium battery, described above.

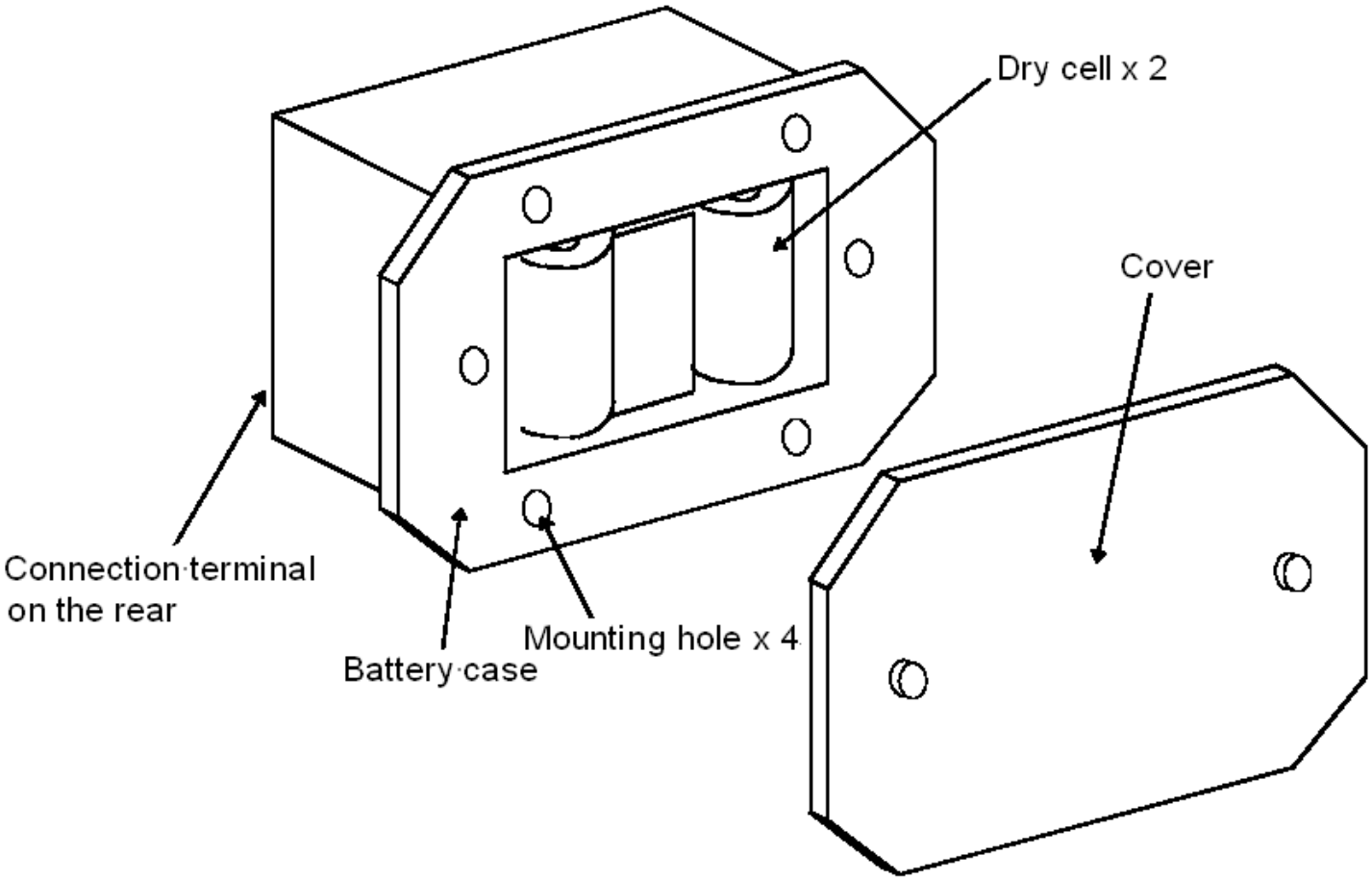

2.3 Battery for separate absolute pulse coders (6VDC)

The current position data of the absolute pulse coder connected to the separate detector interface unit is saved by the battery connected to connector JA4A of the separate detector interface unit.
If the voltage of the battery drops, DS alarms 306 to 308 are issued. When DS alarm 307 (battery voltage drop alarm) occurs, replace the battery as soon as possible. Estimated time to run out of the battery is 1 to 2 weeks, but the actual life depends on the number of pulse coders.
If the voltage of the battery further drops, DS alarms 306 (battery zero alarm) occurs. In this case, the current position of the pulse coder cannot be recorded and DS alarm 300 (reference position return alarm) occurs. Replace the battery and perform a reference position return.
Although the battery life depends on the number of pulse coders connected, it is recommended that the battery be replaced annually regardless of the issuance of the above alarms.

Replacing a battery

Obtain four commercially available alkaline batteries (size D).
<1> Turn on the power of the machine (CNC).
<2> Loosen the screws of the battery case, and remove the cover.
<3> Replace the dry batteries in the case.

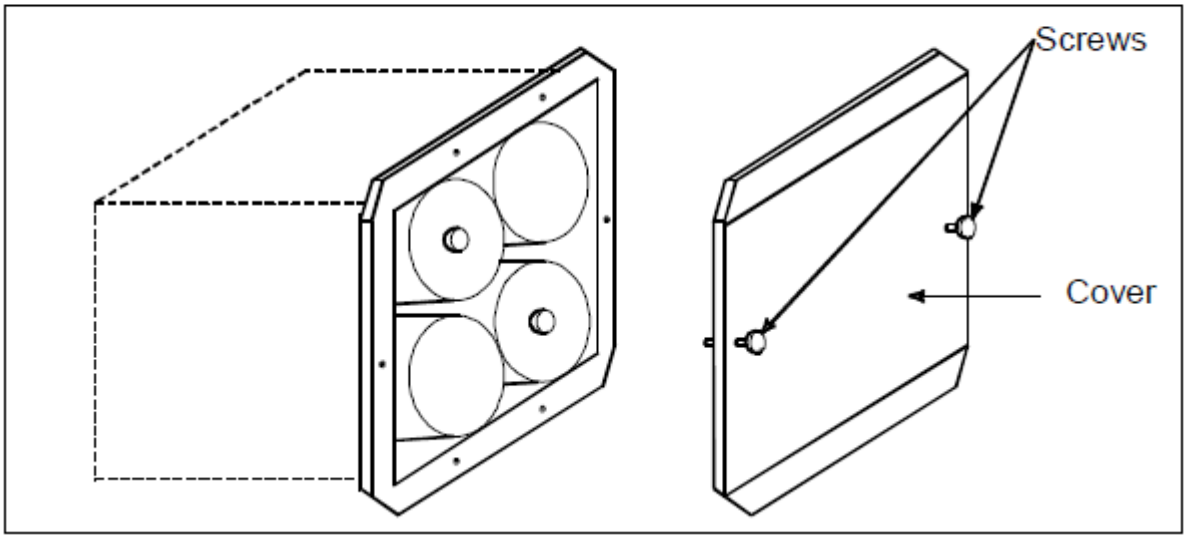

<4> After installing the new batteries, replace the cover.
<5> Turn off the power to the machine (CNC).

⚠ **WARNING**

When connecting the battery, pay attention to its polarity. Connecting it in reverse polarity may lead to abnormal heat generation, explosion, or even fire. It may also lead to loss of absolute position data from the absolute pulse coder. Never use batteries other than the specified type (Size D alkaline batteries).

⚠ **CAUTION**

The battery must be replaced with the power of the CNC turned on (the servo amplifier turned on). Note that, if batteries are replaced while no power is supplied to the CNC, the recorded absolute position is lost.

2.4 Battery for absolute pulse coders Built into the built Motor (6VDC)

The battery for the absolute pulse coder built into the motor is installed in the servo amplifier. For the methods of connection and replacement, refer to the maintenance manual of your servo amplifier.

3. Replacing fan unit

⚠ **WARNING**

When opening the cabinet and replacing a fan motor, be careful not to touch the high-voltage circuits (marked ⚠ and fitted with an insulating cover).
Touching the uncovered high-voltage circuits presents an extremely dangerous electric shock hazard.

3.1 Replacement procedure

<1> Before replacing a fan motor, turn off the power to the CNC.

<2> Extract the fan motor to be replaced. (Hold the latch of the fan unit, and extract the unit upward while releasing the claw from the case.)

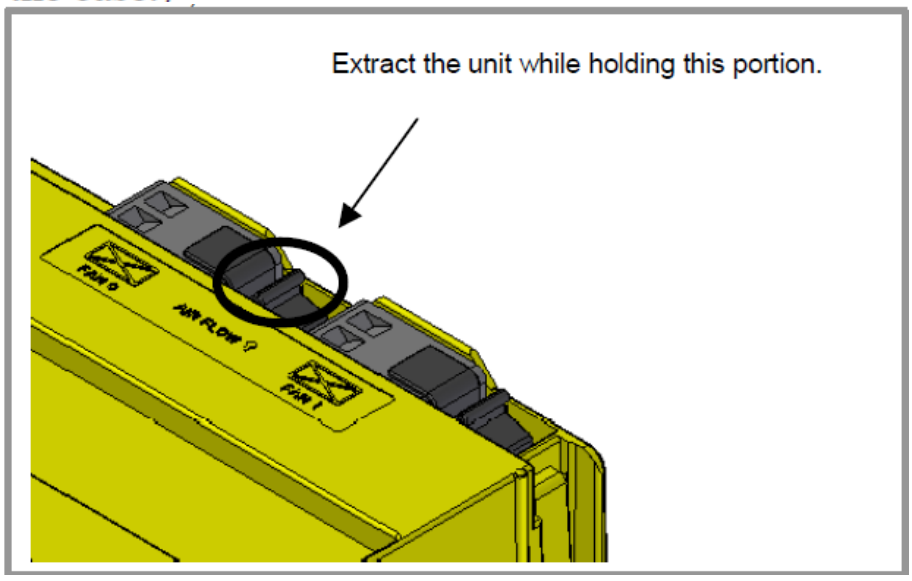

<3> Mount a new fan unit. (Push the fan unit in until the claw is latched into the case.)

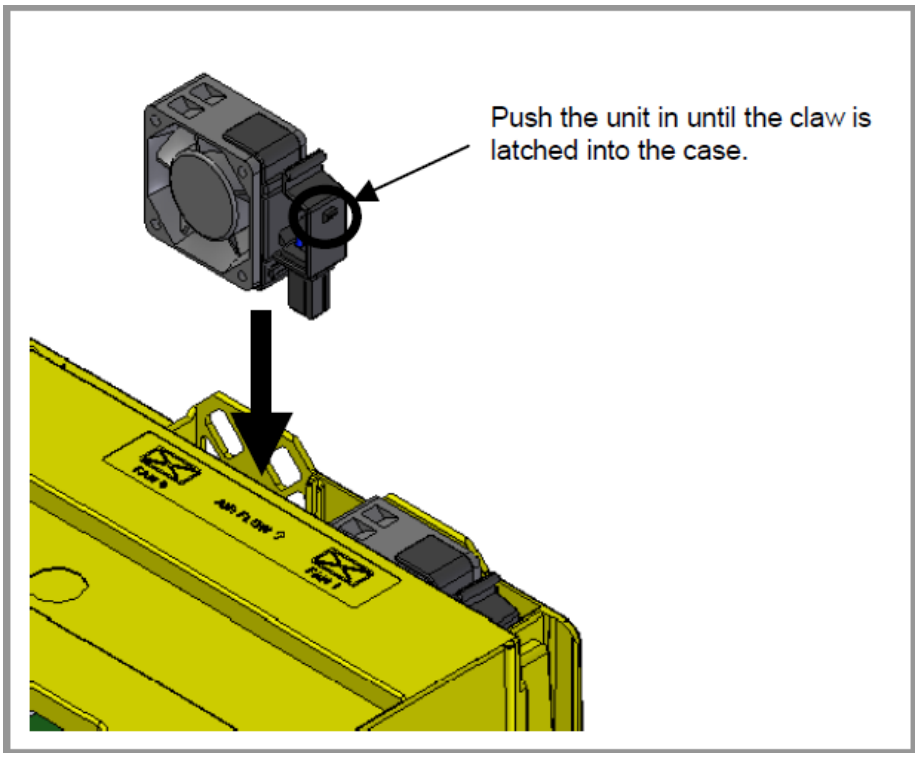

4. High Speed High Accuracy Machining Control Function

This function is applied major in machining with high speed and high accuracy. It can reduce delay of acceleration／deceleration due to promotion of federate so that the error of shape in machining is reduced too.

Besides, with the function of the most blocks looked-ahead in linear acceleration／deceleration before interpolation, smooth acceleration／deceleration over multi-blocks is achieved. Therefore, the machining effect is improved.

4.1 AI Advanced Preview Control (AI-APC)

Format：

G05.1 Q_：

Explanations：

Q1：AI advanced preview control ON

Q0：AI advanced preview control OFF

The following functions become effective in the AI-APC mode.

1. Multiple blocks look – ahead bell-shaped acceleration / deceleration function before interpolation (Maximum 30 block).

2. Linear acceleration / deceleration after interpolation.

3. Automatic corner deceleration function.

4. Feed rate clamp based on are radius function.

5. Block overlap function (Maximum 5 blocks).

6. Look-ahead feed forward function.

Note：(1) Please command G05.1 with an independent block.

(2) AI-APC is released by the RESET key RESET.

(3) It's necessary to turn off AI-APC mode before tool change then turn on AI-APC mode.

```
EX：O2233；
      :
    G05.1 Q1；
      :
    G05.1 Q0；
    M6T_；
    M30；
```

4.2 AI NANO Contour Control (AI NANO CC)

Format：

G05.1 Q_：

Explanations：

Q1：AI NANO contour control ON

Q0：AI NANO contour control OFF

The following functions become effective in the AI NANO CC mode.

1. Multiple blocks look – ahead bell-shaped acceleration / deceleration function before interpolation.
2. Linear acceleration / deceleration after interpolation.
3. Automatic corner deceleration function.
4. Feed rate clamp based on are radius function.
5. Block overlap function (Maximum 5 blocks).
6. Look-ahead feed forward function.

7. NANO interpolation function

Note：(1) Please command G05.1 with an independent block.

(2) AI NANO CC is released by the RESET key RESET .

(3) It's necessary to turn off AI NANO CC mode before tool change then turn on AI NANO CC mode.

EX：O2233；

：

G05.1 Q1；

：

G05.1 Q0；

M6T_；

M30；

4.3 AI NANO High Precision Contour Control (AI NANO HPCC) (Optional Function)

Format：

G05.1 P_：

Explanations：

P10000：AI NANO high precision contour control ON

Q0：AI NANO high precision contour control OFF

The following functions become effective in the AI NANO HPCC mode.

1. Multiple blocks look – ahead bell-shaped acceleration / deceleration function before interpolation. (Maximum 600 blocks)

2. Linear acceleration / deceleration after interpolation.

3. Automatic corner deceleration function.

4. Feed rate clamp based on are radius function.

5. Block overlap function (Maximum 5 blocks).

6. Look-ahead feed forward function.

7. Smooth interpolation function

8. NANO interpolation function

Note：(1) Please command G05 with an independent block.

(2) AI NANO HPCC is released by the RESET key RESET .

(3) It's necessary to turn off AI NANO HPCC mode before tool change then turn on AI NANO HPCC mode.

```
EX：O2233；
      :
    G05 P10000；
      :
    G05 P0；
    M6T_；
    M30；
```

4.4 Conditions for High Speed High Accuracy Control

When the function of high speed high accuracy is commanded , the alarm No.5111 will occur if The following conditions are not satisfied.

G code	Meaning
G00	Positioning
G01	Linear Interpolation
G02	Circular Interpolation／Helical Interpolation (CW).
G03	Circular Interpolation／Helical Interpolation (CCW).
G13.1	Polar coordinate interpolation cancel mode
G15	Polar coordinate command cancel
G25	Spindle speed fluctuation detection off
G40	Cutter compensation cancel
G40.1	Normal direction control cancel mode
G49	Tool length compensation cancel
G50	Scaling cancel
G50.1	Programmable mirror image cancel
G64	Cutting mode
G67	Macro modal call cancel
G69	Coordinate system rotation cancel
G80	Canned cycle cancel
G94	Feed per minute
G97	Constant surface speed control cancel
G160	Infeed control function cancel

5. Rotary table Interface Install Description

5.1 Interface detail

Item	Name		Qty
1	Rotary table side	Motor power wire 4th clamp/unclamp switch wire 4th clamp/unclamp solenoid valve wire	2
2		Motor encoder wire	2
3	Machine side	Motor encoder wire	2
4		Motor power wire	2
5		4th clamp/unclamp switch wire	2
6		4th clamp/unclamp solenoid valve wire	2
7		waterproof cover for item 4	2
8		waterproof cover for item 3	2

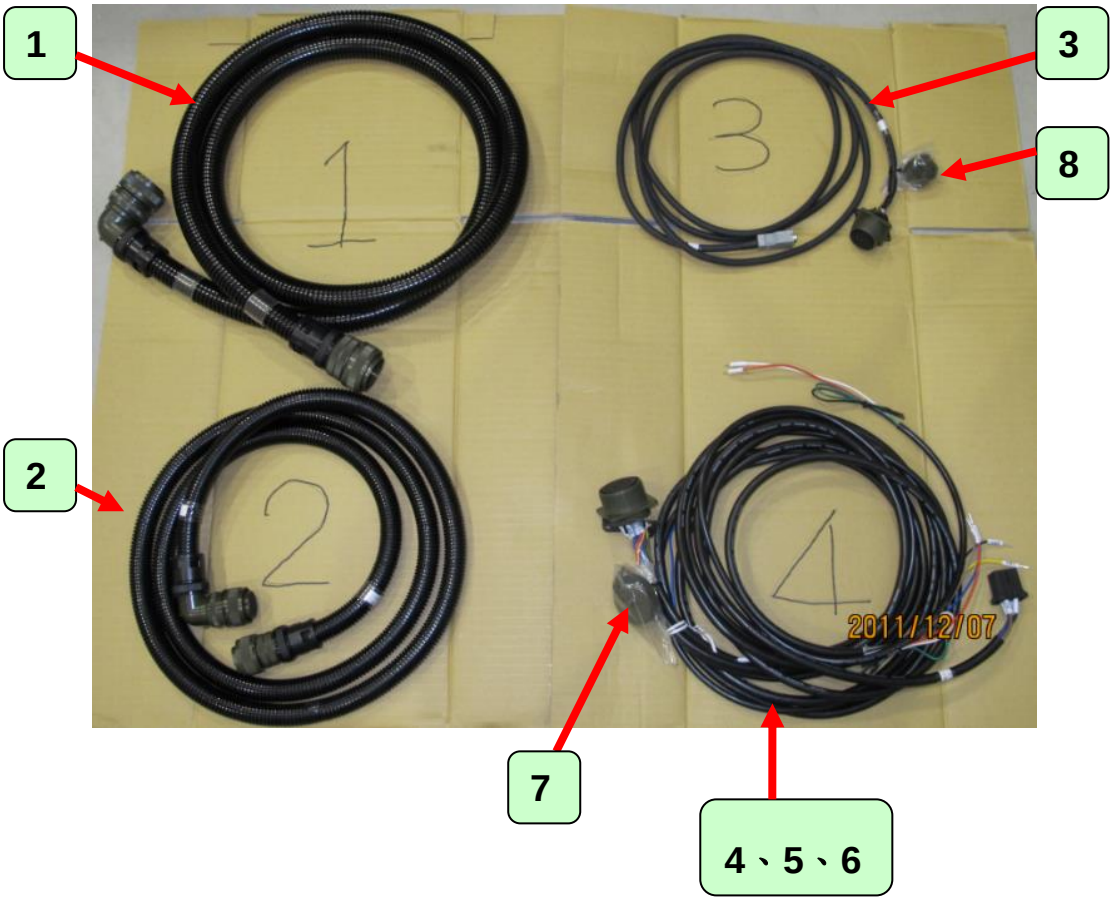

5.2 Parts description

1) Motor power wire
(Rotary table side)

2) Motor encoder wire
(Rotary table side)

3) Motor encoder wire
(Rotary table side)

4、5、6) Motor power wire
(Machine side)

7) waterproof cover
for item 4

8) waterproof cover
for item 3

5.3 Terminal block input side wires description

Item	Name	Wire number	Remark
1	4th motor power	AU.AV.AW.PE	
2	DC24V	24V	For clamp/unclamp switch power
3	Clamp switch	185	
4	Unclamp switch	186	
5	Z axis zrn switch	193	
6	4th clamp/unclamp solenoid valve	277	★Solenoid valve power is DC24V pls double check it

1) DC24V

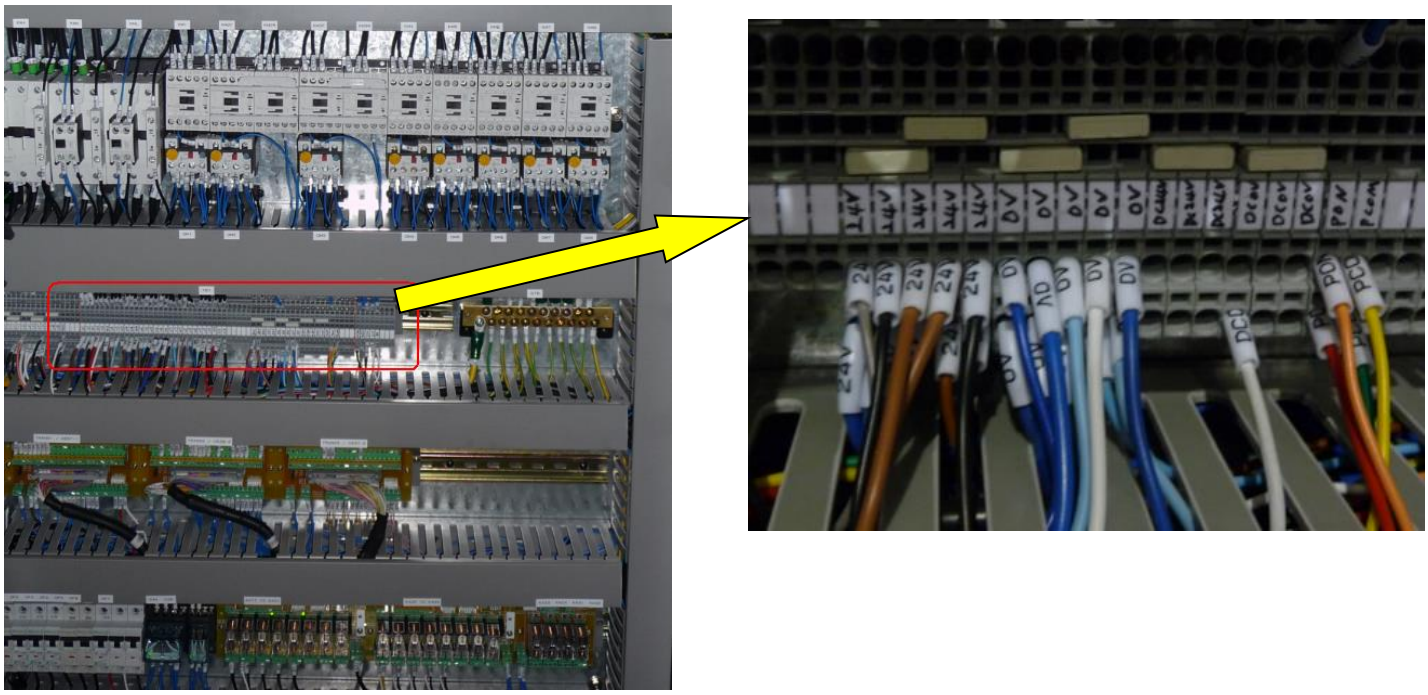

2) clamp/unclamp switch (185、186)

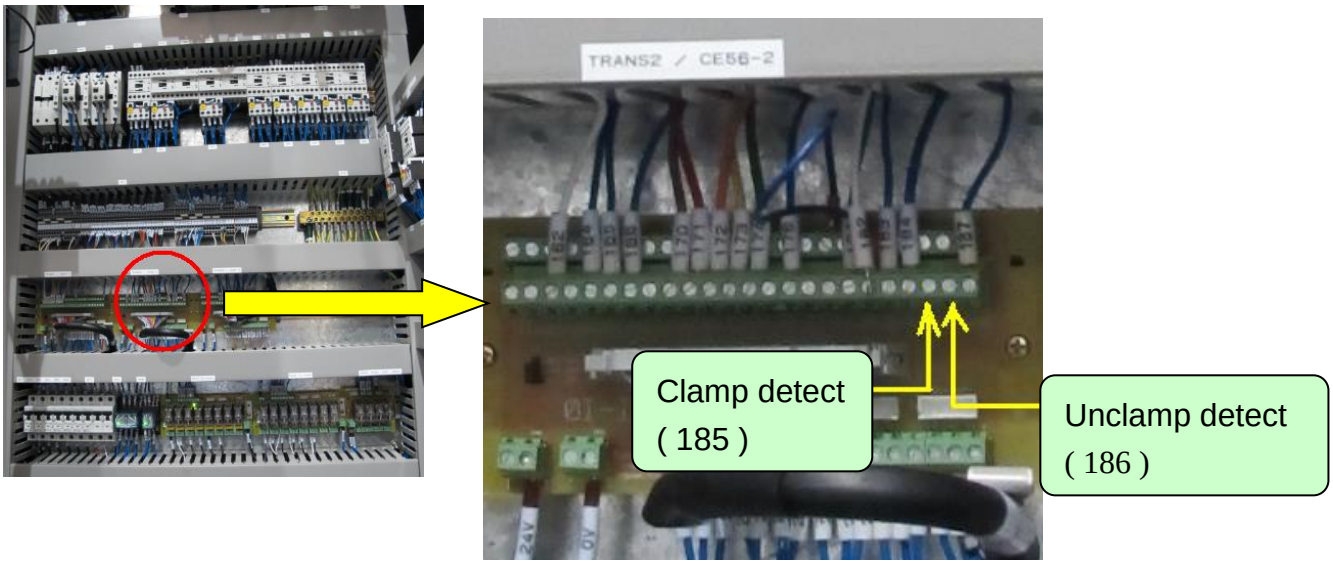

3) clamp/unclamp solenoid valve power (257、0V)

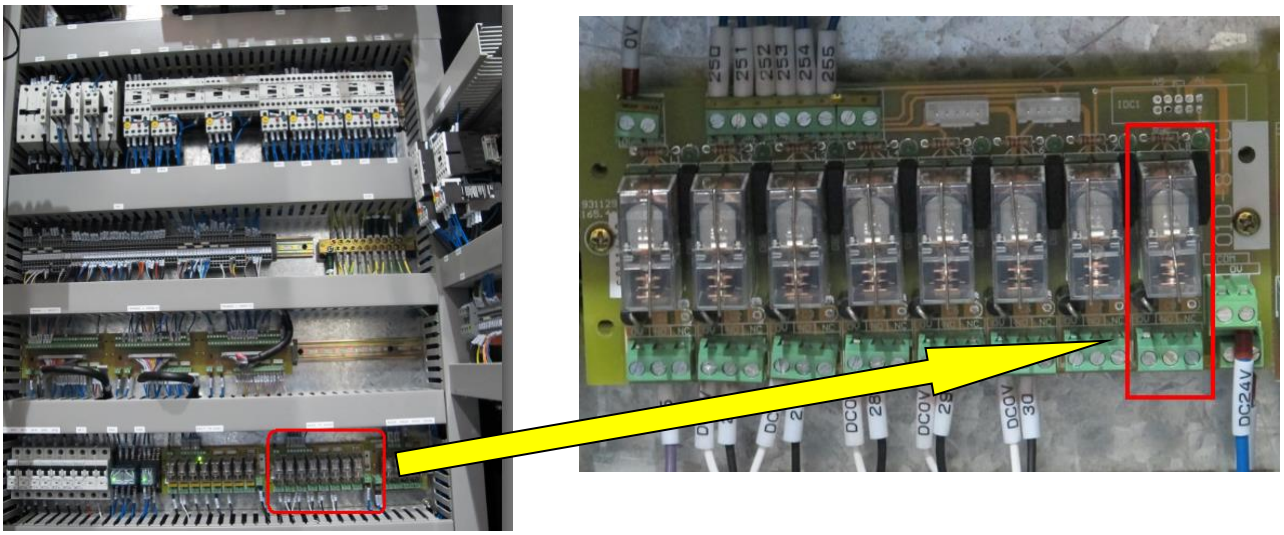

5.4 PLC description：

1) M CODE：

M25：A Axis Unclamp M26：A Axis Clamp

2) A Axis Clamp / Unclamp Detect：

Clamp Detect：X8.5 Unclamp Detect：X8.6

3) Clamp/unclamp solenoid valve power：Y7.7

4) Alarm message Description：

AL1084：A AXIS UNCLAMP FINISH ERROR

AL1085：A AXIS CLAMP FINISH ERROR

5) Unclamp delay time :

Timer NO.80 , setting value : 496

6) Alarm Detect Timer :

Timer NO.81 , setting value : 2000 → Unclamp

Timer NO.82 , setting value : 2000 → clamp

6 .Tool Setter Probe Install

INSTALLATION AND PROGRAMMING MANUAL

1 INTRODUCTION

1.1 General Information

The BLUM probe Z-NANO/ Z-NANO IR / Z-PICO is a tactile high-precision measuring system for automated measurement of the tool length within the working area of a machining center working under normal operating conditions. When measuring the tool geometry, incorrectly loaded tools or inaccurately preset tools are recognized in due time, as well as worn or damaged tools. Using the correct strategy for tool offset or tool change, further damage for the tool or for the part can be avoided.
Advanced possibilities for tool setting, breakage monitoring and contour control of rotating tools are available with the BLUM Laser System, which is a non-contact tool setting device. Further information can be obtained from our technical service department.

1.2 Function of the Probe

The touch probe Z-NANO / Z-NANO IR / Z-PICO is a high-precision switch and is built into a rigid body together with the corresponding electronic parts. When the probe is deflected, the status of the probe changes at a certain defined position.

Blum offers two kinds of technologies. The cable bound as well as the infrared controlled probe (IR). Both systems are designed for 24V DC. The Output Signals have the same voltage level. The cable bound system is ready for operation immediately after the power is switched on. IR–Systems have to be switched on and off before and after measuring. The following output signals are available:

- The ***Output static*** issues the following signal levels depending on the probe deflection:
  0 V with not actuated probe (probe not deflected)
  24 V with actuated probe (probe deflected)
- The ***Output static inverse*** issues the following signal levels depending on the probe deflection:
  0 V with actuated probe (probe deflected)
  24 V with not actuated probe (probe not deflected)

Notes concerning Measuring Sequence

CAUTION

Risk of collision: Limit measuring block overtravel

☞ Respect feedrate of the machine manufacturer

☞ Calibration and tool measurement at the same constant feedrate

For further information concerning the probe Z-NANO, Z-NANO IR and Z-PICO please refer to the operating manual.

1.3 Practical Operations

Following measuring tasks can be executed:

- Calibration of the measuring device
- Temperature Compensation of the CNC axes
- Measuring of the tool length
- Tool wear detection
- Breakage detection

1.4 Program Overview

Auxiliary programs:

The auxiliary programs are called by the individual measuring cycles. During commissioning machine-specific adaptations must be made in the auxiliary program marked with #.

O9917 #	Machine-specific parameters, User Start / User End Program etc.
O9918	Error messages

Available measuring cycles:

O9914	Measuring cycle calibration / temperature compensation
O9915	Measuring cycle tool length measurement

Example programs:

The program examples show, which parameters must be defined when calling up the measuring cycles and how the measuring cycles can be called out of a machining program.

O914	Example program for cycle O9914 calibration / temperature compensation
O915	Example program for cycle O9915 tool length measurement

2 INSTALLATION NOTES

2.1 Mechanical Installation

The probe Z-NANO, Z-NANO IR and Z-PICO has to be mounted **stable** in the working area of the machine. The mounting position should be selected so that no chips can accumulate on the measuring surfaces of the probe (if necessary pls. provide an automatic air blow or similar to clean the probe). The measuring surface must be aligned rectangular to the tool length axis to avoid faulty measurements. The system should be mounted close to the tool changing position. Furthermore, the position should be selected in a way, that a collision between the tool and the workpiece or the clamping devices can be avoided in any case.

2.2 Electrical Connection to the CNC

The probe must be connected to the 24 V power supply of the machine and the skip input of the control (SKIP). In order to control readiness as well as cable breakage the signal ***Output static inverse*** can alternatively be connected via optocoupler to the measuring input of the control (HighSpeedSkip HDIx or SKIP X4.7). Not connected cables have to be insulated (Danger of short-circuit).
NOTE: The use of a HighSpeedSkip is recommended.

2.2.1 Electrical Installation of cable-type Probe System Z-Nano / Z-Pico

Connection Z-Nano / Z-Pico to Skip X4.7:

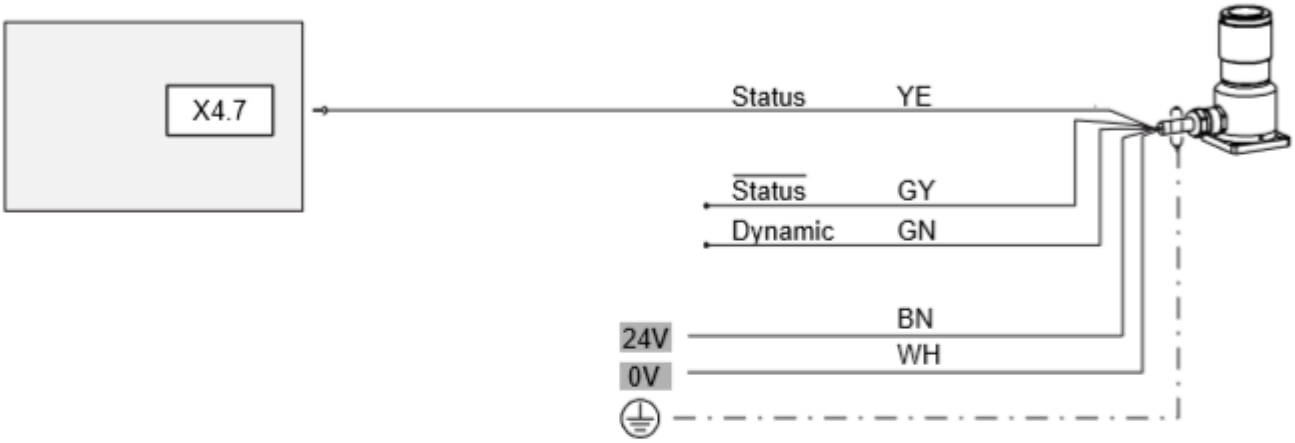

Color	Signal	Description
White	GND	Ground
Brown	UB	supply voltage 15-30 V/100 mA
Yellow	STATUS	output static (inactive=0; active=UB)
Grey	STATUS INVERS	output static invers (inactive=UB; active=0)
Green	DYNAMIC	100ms square-wave signal (not at Z-Pico)
	---	Shielding

Connection Z-Nano / Z-Pico to High Speed Skip HDI0:

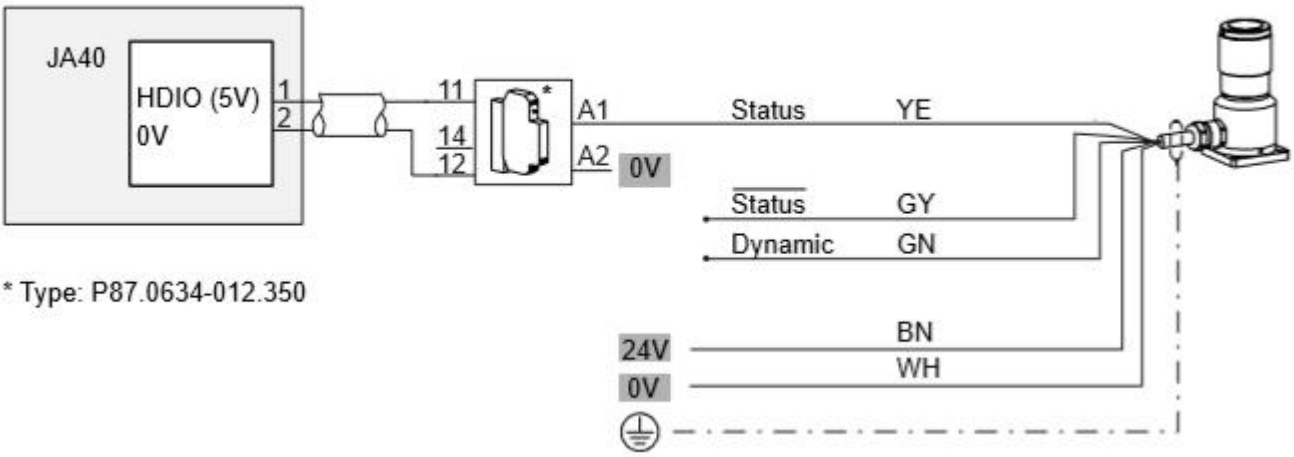

* Type: P87.0634-012.350

Color	Signal	Description
White	GND	Ground
Brown	UB	supply voltage 15-30 V/100 mA
Yellow	STATUS	output static (inactive=0; active=UB)
Grey	STATUS INVERS	output static invers (inactive=UB; active=0)
Green	DYNAMIC	100ms square-wave signal (not at Z-Pico)
	---	Shielding

2.2.2 Electrical Installation of IR Probe System Z-Nano IR

The Measuring System is controlled via IR–Receiver. It must be connected to the 24 V power supply of the machine and the skip input of the control. In order to control readiness as well as cable breakage the signal ***Output static inverse*** can alternatively be connected to the measuring input of the control.
Not connected cables have to be insulated (Danger of short-circuit).

Blum Interface IF59 P03.5900-010-A2

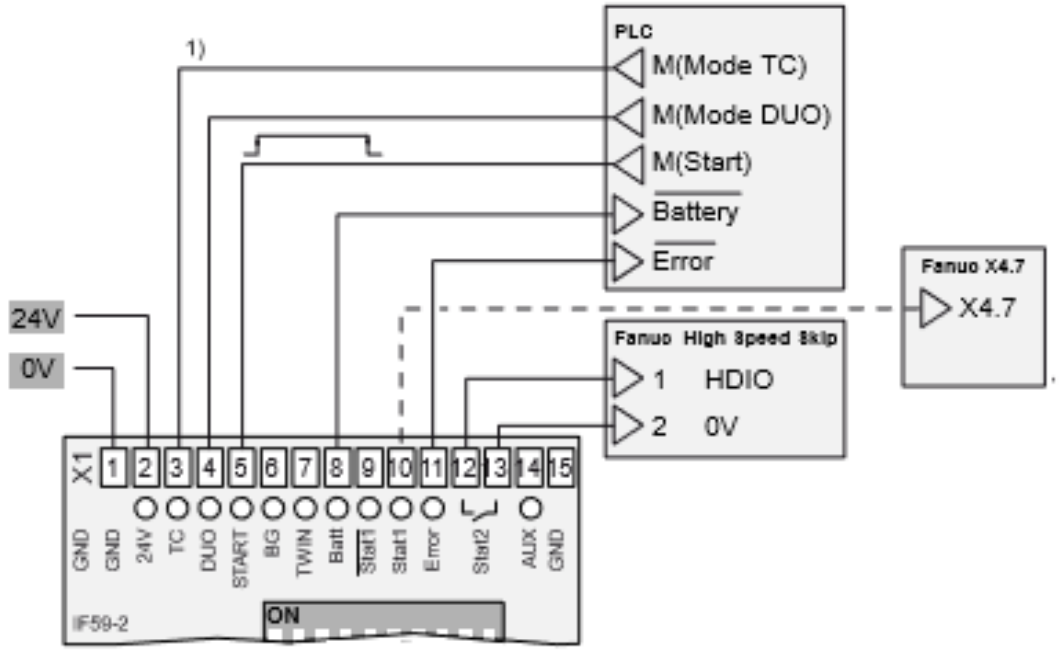

P87.0634-012.355	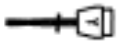	Connecting cable High Speed Skip Fanuc
Condition:		Dip switch IF59
CAUTION	Fanuc Normal Skip X4.7: Pay attention to stopping distance! Maximum measuring speed: 1 m/min	
Z-NANO IR switch on	M(Mode TC) = 0 M(Mode DUO) = 1 ;Mode DUO M(Start) = 1 ; Z-NANO IR on	
Z-NANO IR switch off	M(Start) = 0 ; Z-NANO IR off M(Mode DUO) = 0 ;Standby M(Mode TC) = 0	

Connection Z-NANO IR to Skip X4.7:

Electrical connection for BLUM Z-NANO IR (infrared) over IC56 / IF59 to Fanuc Skip X4.7				
Signals IF59				
Pin	Color	Description	Data	Connection to terminal / level
1		GND / Ground	0V	GND / Ground of the machine
2		UB / Supply Voltage	15-30V (100 mA)	+24 VDC Power supply of the machine
3		Mode TC	0V / 15-30V (10 mA)	PLC output (M-Code to switch to TC5x)
4		Mode DUO	0V / 15-30V (10 mA)	PLC output (M-Code to switch Z-NANO IR)
5		Flash / Start	0V / 15-30V (10 mA)	PLC output (M-Code to switch probe on / off)
8		Battery	0V / 15-30V (50 mA)	PLC input (Input of PLC Xx.0)
10		Stat1	0V / 15-30V (50 mA)	Fanuc Skip X4.7 (Input of PLC X4.7)
11		Error	0V / 15-30V (50 mA)	PLC input (Input of PLC Xx.1)

Connection Z-NANO IR to HighSpeedSkip HDI0:

Electrical connection for BLUM Z-NANO IR (infrared) over IC56 / IF59 over Fanuc High Speed Skip						
Signals IF59						
Pin	Color	Description	Data	Connection to terminal / level		
1		GND / Ground	0V	GND / Ground of the machine		
2		UB / Supply Voltage	15-30V (100 mA)	+24 VDC Power supply of the machine		
3		Mode TC	0V / 15-30V (10 mA)	PLC output (M-Code to switch to TC5x)		
4		Mode DUO	0V / 15-30V (10 mA)	PLC output (M-Code to switch to Z-NANO IR)		
5		Flash / Start	0V / 15-30V (10 mA)	PLC output (M-Code to switch probe on / off)		
8		Battery	0V / 15-30V (50 mA)	PLC input (Input of PLC Xx.0)		
11		Error	0V / 15-30V (50 mA)	PLC input (Input of PLC Xx.1)		
				Blum cable P87.0634-12.355		
				Pin	Color	Description / Connection
12		Stat2	SSR	1	WH	High Speed Skip HDIO
13		Stat2	SSR	2	BN	High Speed Skip 0V

2.3 Adaptation of the Machine Parameters

Following machine data have to be changed if necessary.

- In order to use the BLUM measuring cycles, the macro B option is required. The accompanying options bit must be set.
- If the High-Speed-Skip (HSS) is used, the accompanying option bit must be set. The program will monitor the HSS during the measuring block G31. In special cases in lines with G31 the path Px (x=1..8) has to be added.
- To load and test the BLUM measuring macros or to make necessary changes or adaptations, the write protection must be disabled: parameter 3202.4 (NE9) = 0, i.e. write protection for programs %9xxx is inactive.

Control: 15-MB, 150MB

7200.4=1	HSS	Skip uses High Speed Skip
7200.5=0	SFP	Feedrate skip function is executed
7200.6=0	SRE	Skip Flag with raising(=0) or falling(=1) edge
7201.x=1	1S1	High Speed Skip Input 1 is used for G31
7300.7=1	SEB	Accel./Decel., servo delay compensation Type B
2401.6=0		Multibuffer Mode (1=read ahead 15/60 blocks / 0=standard 5 blocks) Switch-over with: G05.1 P1=multibuffer mode off / G05.1=multibuffer mode on
2400.0=1		Input value tool offset 0=µm / 1=mm

FANUC: 16-MB, 160-MB, 18-MB, 180-MB, 16i, 160i

6200.4=1	HSS	Skip uses High Speed Skip
6200.6=1	SRE	Skip Flag with raising(=0) or falling(=1) edge
6200.7=1	SKF	Dryrun, override, automat. acc./dec. enabled
6202.x=1	1S1	High Speed Skip Input 1 is used for G31
6201.1=1	SEB	Accel./Decel., servo delay compensation Type B

3 Description of the Measuring Cycles

3.1 Machine - Specific Software Adaptation

The measuring cycles are in modular design. Subroutine O9917 **must** be completed on commissioning and adapted to the machine. Otherwise the cycles will not function and there is risk of collision with the probe system.
Subroutine O9917 is divided into seven sections:

- **N100** (machine-specific functions)
  Machine-specific definitions, axes assignment, basic adjustments.
  Applicable values **must** be written into these parameters on commissioning.
- **N200** (user starting program)
  This sequence will be carried out before each measuring cycle. Machine-specific functions can be programmed by the manufacturer or enduser.
- **N300** (user end program)
  This sequence will be executed after each cycle. Machine-specific functions can be programmed by the manufacturer or enduser.
- **N400** (switch-on Z-NANO IR only!)
  If IR probe system Z-NANO IR is used, activation with IR flash is required before measurement.
  The switch-on routine (e.g. M-function) can be programmed in this section. With a cable-type system, this section remains empty.
- **N500** (switch-off Z-NANO IR only!)
  If IR probe system Z-NANO IR is used, deactivation with IR flash after measurement is required.
  The switch-off routine (e.g. M-function) can be programmed in this section. With a cable-type system, this section remains empty.
- **N600** (Delete TC Compensation value)
  If temperature compensation is used, existing offset values must be deleted at each reference measurement (B1). This can be programmed in this section. If no temperature compensation is used, this section remains empty.

  Example for usage of external zero offset:

  ```
  N600 (DELETE TC COMPENSATION VALUE)
  #5203=0(EXTERNAL ZERO OFFSET Z-AXIS)
  GOTO9999
  ```

- **N700** (Write TC Compensation value)
  If temperature compensation is used, defined offset values must be written at each reference measurement (B2). This can be programmed in this section. If no temperature compensation is used, this section remains empty.

  Example for usage of external zero offset:

  ```
  N700 (WRITE TC COMPENSATION VALUE)
  #5203=#[#139+1](EXTERNAL ZERO OFFSET Z-AXIS)
  GOTO9999
  ```

3.2 Machine-Specific Constants

To keep the cycles easy following limitations were made:

- Tool length axis is the Z-axis.
- Tool length measurement direction is Z-, G43 is used.

In order to make measuring cycles variable the parameters are stored in the auxiliary program O9917. They **have to be** set to useful values before the first call of the program. The measuring cycle can be used for mm as well as for inch machines. **Input of all parameters must be metric.**

Parameter	Definition / Meaning
#110=_____	**Language selection** 0=english, 1=german; 2=french, 3=italien, 4=spanish, 5=dutch, 6=swedish, 7=portuguese, 8=danish, 9=czech Default value: 0
#111=_____(X) #112=_____(Y) #113=_____(Z)	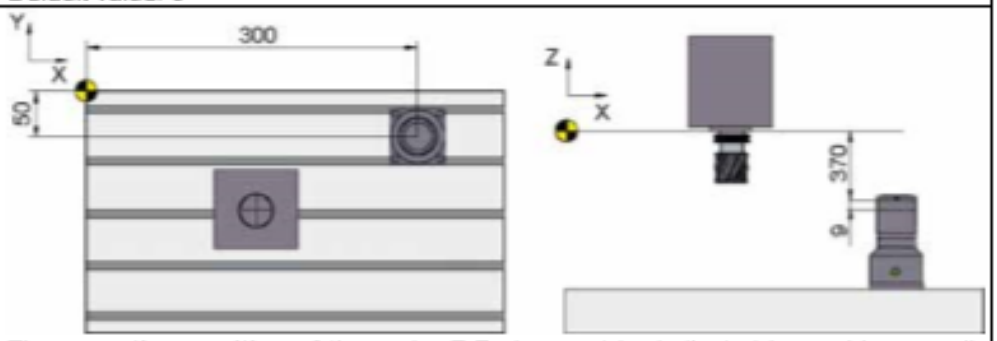 The **mounting position** of the probe Z-Probe must be indicated in machine coordinates with an accuracy of approx. 0.1 mm. Example: #111=300, #112=50, #113=-370.
#116=_____	**Diameter Z-NANO, Z-NANO IR, Z-PICO** Value range: 0 to 99.999 mm Default value: 18.000 mm.
#118=_____	**Rapid traverse** Positioning feed for large positioning distances, e.g. moving into retract position Z. Default value: 10000 mm/min
#119=_____	A measuring block is used for pre-positioning. Thus, any damage to the probe can be avoided. The **positioning feed** rate should be selected small enough to stop the axis within the over travel range of the probe. Default value: 5000 mm/min
#120=_____	**Measuring feed** A repeatability of ± 1 µm can be achieved up to a value of 1000 mm/min. The measuring feed rate should be set small enough to stop the axis within the over travel range of the probe. If the value is changed, a new calibration has to be done. Default value: 1000 mm/min
#125=_____	**Axis number radius axis** 0=X-Axis, 1=Y-Axis Default value: 0
#126=_____	**Radial approach side** -1=negative side, +1=positive side Default value: 1
#127=_____	The **retract position** in Z is approached before and after measurement and is indicated in machine coordinates referring to the tool holder reference point. Every tool should reach this position collision free.
#129=_____	**Safety distance** above the measuring surface. Before the actual measurement the tool is brought to a safety distance above the measuring surface. From this position a measuring block is executed. Value: => 1 mm Default value: 3 mm

Parameter	Definition / Meaning
#130=_____	**Maximum overtravel** In order to avoid a damage of the probe the max. overtravel (measuring distance) in which a trigger signal is awaited, is limited. The value depends on the mechanical overtravel of the probe. Value: 1.0 mm to 5.0 mm Default value: 5 mm
#131=_____	**Maximum tool length** Value to calculate the starting position at tool length measurement Default value: 300 mm
#132=_____	**Minimum tool length** Value to calculate the final position for tool length measurement. Default value: 60 mm
#134=_____	**Basic address of tool memory for tool length** Default value: 11000
#136=_____	**Basic address of tool memory for tool length wear** Default value:10000
#138=_____	**Tool wear tolerance** Value: 0.0 mm to 2.0 mm Default value: 0.02 mm
#139=_____	**Start address calibration parameter** These parameters must not be deleted or overwritten even when the control is switched off. Value: 500 to 999 Default value: 500
#140=_____	**The tool length is reckoned up with the work piece coordinate system** 0=Machine parameters 5006.6 and 6006.4 are equal 1=Machine parameters 5006.6 and 6006.4 are unequal Default value: 0
#141=_____	**Trigger point correction** High Speed Skip=0.008 sec Skip X4.7=0.020 sec Default Value: 0.008
#142=_____	**Program stop at error message** 0=Stop, -1=no Stop Default value: 0
#146=_____	**Length of zero tool** The real length of the zero tool is inserted here. 0=no zero tool, >0=zero tool Default value: 0
#149=_____	**Max. admissible offset at TC reference measurement.** The thermal growth of the machine is limited. To detect errors during measurement a tolerance for the TC reference measurement is defined. Input: 0 bis 0.999 mm Default value: 0.2 mm

Parameter	Definition / Meaning
#[#139+0]=_____	The calibration value (trigger point of probe) of the Z-Axis is updated after each calibration. These parameters must not be deleted or overwritten even when the control is switched off.
#[#139+1]=_____	The TC offset value of the Z-axis is updated at each TC comparison measurement (B2). These parameters must not be deleted or overwritten even when the control is switched off.

Note: After changing one or more of the parameters above a calibration cycle has to be executed. A check for plausibility is carried out then.

3.3 Definition of Parameters with 2 Probing Systems in use.

If 2 Probing systems are used within one machine you have to take care of giving each probe his own definitions. In most case the differences between probe1 and probe2 are limited to the measuring position (X/Y/Z), the Start address of the calibration parameters and the number of measuring input.

Before calling the definition block the needed system hast o be selected. Therefor Variable #109 can be used. It has to be set either inside the Startroutine O9917 in N200, or preset the parameter before the cyclecall with 1 (System1) or 2 (System2).

For more adjustments in O9917 at N100 see the following example.

```
....
N100:  ;(MACHINE SPECIFIC FUNCTIONS)

IF(#109EQ2)GOTO120
(PARAMETER FOR SYSTEM 1)
#111=999.999(POSITION X-AXIS IN MKS)
#112=999.999(POSITION Y-AXIS IN MKS)
#113=999.999(POSITION Z-AXIS IN MKS)
#139=500(START ADDRESS FOR CALIBRATION-/TC-PARAMETER)
GOTO130

N120(PARAMETER FOR SYSTEM 2)
#111=999.999(POSITION X-AXIS IN MKS)
#112=999.999(POSITION Y-AXIS IN MKS)
#113=999.999(PROBE POSITION Z- AXIS IN MKS)
#139=505(START ADDRESS FOR CALIBRATION-/TC-PARAMETER)

N130(PARAMETER FOR BOTH SYSTEMS)
#110=1(LANGUAGE 0=ENGLISCH, 1=GERMAN)
#116=18.000(DIAMETER PROBE HEAD Z-AXIS)
#118=10000(RAPID FEED RATE)
#119=5000(POSITIONING FEED RATE)
#120=1000(MEASURING FEED RATE)
#125=0(NUMBER OF RADIUS AXIS, 0=X-AXIS / 1=Y-AXIS)
#126=1(APPROACH SIDE RADIUS AXIS, -1=NEGATIVE SIDE / +1=POSITIVE SIDE)
#127=0(RETRACT POSITION Z-AXIS IN MKS)
#129=3(SAFETY DISTANCE OVER MEASURING SURFACE)
#130=5(MAXIMUM MEASURING OVER TRAVEL)
#131=300(MAXIMUM TOOL LENGTH)
#132=60(MINIMUM TOOL LENGTH)
#134=11000(BASIC ADDRESS OF TOOL MEMORY FOR TOOL LENGTH)
#136=10000(BASIC ADDRESS OF TOOL MEMORY FOR TOOL LENGTH WEAR)
#138=0.02(TOOL WEAR TOLERANCE)
#140=0;(MACHINE PARAMETER 5006.6 AND 6006.4)
#141=0.008(CORRECTION VALUE FOR SKIP)
#142=0(PROGRAMM STOP WITH ERROR MESSAGE)
#146=0(LENGTH ZERO TOOL, 0=NO ZERO TOOL)
#149=0.2(MAX. ADMISSIBLE OFFSET AT TC-REFERENCE MEASUREMENT)
GOTO9999
```

3.4 Variables

Program call: G65 P99xx H.. B.. [Q..] [R..] [U..]

	Definition / Bedeutung	Option
H	Offset number for tool length (H-Code) Note: If H is not defined, the H-code is automatically determined with the address of #4111 (H-Code) or #4120 (T-Code). If these variables not available the cycle is aborted with a error message.	Optional
B	Measuring mode cycle **O9914** 0=calibration, 1=TC-reference measurement, 2=TC-comparison measurement Note: If B is not defined measurement is executed with B0 (calibration). Measuring mode cycle **O9915** 0=measuring, 1=verification, 2=check Note: If B is not defined measurement is executed with B0 (measure).	Optional
Q	Wear tolerance length At B1 the tool is checked for specified limits. Depending on the tool memory the wear value is written. At B2 the tool is checked for specified limits. No wear value is written into the tool memory. Note: If Q is not defined #138 is used as wear tolerance.	Optional
R	Radial measuring position for length measurement Offset in X- or Y-direction for excentric positioning of the tool above the probe. Note: If R is not defined the tool will be measured centric (R0).	Optional
U	Max. admissible offset at TC comparison measurement The thermal increase of the machine is limited. To detect errors during measurement a tolerance for the TC comparison measurement is defined. Note: If U is not defined the max. admissible offset #149 is used.	Optional

3.5 Initial commissioning resp. change of position of the probe system

Attention: This function is available since software version V2AB!

At initial commisioning or after a change of the mounting position of the probe system the tool tip of the calibration tool can be prepositioned manually approx. 3 mm in the center above the measuring surface. The exact tool length of the calibration tool has to be written in the accompanying tool offset. The machine specific constants **must** be properly defined in the auxiliary program O9917 with the exception of the measurement positions.

Example:

```
G65 P9914 H99 B-1                (PROGRAMMAUFRUF)
```

The precise position of the trigger point is determined with a measuring block from the current position. The measuring stroke is the sum of the Safety distance (#129) and the Maximum overtravel (#130) from the auxiliary program O9917 (default 3 mm + 5 mm = 8 mm). After that, the starting position is approached in rapid traverse.
The determined measuring positions are stored in the variables #111, #112 and #113. The measuring cycle is interrupted with a message. This measuring positions must be written in the machine specific constants #111 (measuring position X-axis), #112 (measuring position Y-axis) and #113 (measuring position Z-axis) in the auxiliary program O9917.
After that a calibration with the calibration cycle O9914 **must** be executed (see Section 3.6.1).

Note:
The Calibration cycle O9914 with the call parameter Measuring mode B-1 is intended as an offer for the initial commissioning resp. change of the position of the probe system. The measuring positions can of course also be determined manually.

3.6 Programming

The following part shows the integration of the measuring cycle into a machining program using some examples.

Caution:

- If H is not defined, the H-Code is automatically determined with the address of #4111 (H-Code) or #4120 (T-Code). If these variables not available the cycle is aborted with a error message.
- Starting from the maximum tool length, the pre-positioning is executed as a measuring block. Doing this, an incorrect tool length in the tool offset memory can be detected.
- At a tool with unknown tool length (L=0) pre-positioning is omitted. Measurement is started on the maximum tool length (search run with vertical spindle)
- The Override for feedrate should be set on 100%, to avoid measuring errors by different measuring feedrates.

3.6.1 Calibration O9914

Before the probe can be used for measuring, the system must be calibrated. That means, that the precise position of the trigger point in machine coordinates is determined. For this purpose a wear-free calibration tool must be used, e.g. a cylindrical pin (diameter > 4mm). The calibration tool is clamped into a tool holder. The length of the calibration tool must be determined precisely (µm resolution), either with a tool pre-setting device or inside the machine with a dial indicator and then stored in the tool offset memory.
The cycle determines the trigger point positions and calculates the calibration values as the difference to the known dimensions of the calibration tool. They are written into the calibration parameters and must not be overwritten by any other program. At later tool length measurement these values are used for positioning and calculation of the tool length.

Example for Calibration:

```
...
T99 M6          (LOAD CALIBRATION TOOL)
G65 P9914 H99   (PROGRAM CALL)
...
```

Caution:

- The exact length of the calibration tool has to be written into the accompanying tool offset.

3.6.2 Temperature Compensation of the CNC axes O9914

At increased accuracy requirements the temperature drift of the machine can be compensated with the help of the probe system and the calibration tool. The cycle defines the trigger point position and calculates the TC reference values (B1) or TC offset values (B2) depending on the defined length of the calibration tool. They are written into the calibration parameters and must not be overwritten by any other program.

Return parameter:

- The measured drift of the length axis is available in the parameter #[#139+1].
- At comparison measurement and exceeding of the max. admissible tolerance an error message is given.

Notes:
Thermal drift measuring should be integrated in the machining process in the following way:

- Calibration of the probe with the calibration tool.
- Length measuring of all used tools.
- Test machining of the first part until all part data are in compliance with rated dimensions
- TC reference measuring (B1) to keep the actual machine status as a reference.
- Machining of the next part.
- TC comparative measuring (B2) to determine the actual axis offset with respect to the reference values and processing by means of the additive reference point offset.
- Depending on thermal machine drift and required precision TC comparative measuring can be performed, before or after any desired number of machining tasks.

Example for TC-Reference measurement:

```
...
T99 M6                          (LOAD CALIBRATION TOOL)
G65 P9914 H99 B1.               (PROGRAM CALL)
...
```

Example for TC-Comparison measurement:

```
...
T99 M6                           (LOAD CALIBRATION TOOL)
G65 P9914 H99 B2.                (PROGRAM CALL)
...
```

Caution:

- The exact length of the calibration tool has to be written into the accompanying tool offset.

3.6.3 Tool Length Measurement O9915

With the probe the tool length can be measured precisely. The rough tool length (+/- 2 mm) **should** be entered into the tool correction memory. The temperature related dilatation of the machine can be compensated, if the calibration cycle is carried out first.
At the beginning of the measurement the preset tool length and tool wear are read from the tool offset memory and used for positioning. At the end of the measurement the determined length is written into the tool offset memory, the wear value is set to 0.

Example for length measurement:

```
...
T7 M6                             (LOAD THE TOOL WHICH MUST BE MEASURED INTO SPINDLE)
G65 P9915 H7 B0. Q0.02 R4.0       (PROGRAM CALL)
...
```

3.6.3 Tool Length Measurement O9915

With the probe the tool length can be measured precisely. The rough tool length (+/- 2 mm) **should** be entered into the tool correction memory. The temperature related dilatation of the machine can be compensated, if the calibration cycle is carried out first.
At the beginning of the measurement the preset tool length and tool wear are read from the tool offset memory and used for positioning. At the end of the measurement the determined length is written into the tool offset memory, the wear value is set to 0.

Example for length measurement:

```
...
T7 M6                             (LOAD THE TOOL WHICH MUST BE MEASURED INTO SPINDLE)
G65 P9915 H7 B0. Q0.02 R4.0       (PROGRAM CALL)
...
```

Caution:

- The rough tool length **should** be entered into the tool offset. Tools with unknown tool length can be measured if for the length value 0 is entered into the tool memory. At unknown tool lengths there is risk of collision with the probe system. It is recommended to enter a rough tool length (+/- 2 mm).
- For measurement of the tool length B0 must be set.
- For tool wear measurement B1 must be set. If possible the wear value is written into the tool correction value. When exceeding the tolerance an error message is given.
- For tool monitoring B2 must be set. No wear value is written. When exceeding the tolerance an error message is given.
- Measuring a Radius bigger then #116 an excentric offset in R has to be be given.
- If Q is not defined the standard value from O9917 (#138) is used.

3.6.4 Examples

Tool length measuring

Centric positioning

```
...
T1 M6                          (LOAD TOOL WHICH MUST BE MEASURED INTO SPINDLE)
G65 P9915 H1                   (PROGRAM CALL)
...
```

Excentric positioning (Example with ∅ 60 mm)

```
...
T1 M6                           (LOAD TOOL WHICH MUST BE MEASURED INTO SPINDLE)
G65 P9915 H1 R30.0              (PROGRAM CALL)
...
```

The measured length is written into the tool table. The wear is set to Zero.

Tool length wear measuring

Centric positioning

```
...
T1 M6                           (LOAD TOOL WHICH MUST BE MEASURED INTO SPINDLE)
G65 P9915 H1 B1 Q0.02           (PROGRAM CALL)
...
```

Excentric positioning (Example with ∅ 60 mm)

```
...
T1 M6                           (LOAD TOOL WHICH MUST BE MEASURED INTO SPINDLE)
G65 P9915 H1 B1 Q0.02 R30.0              (PROGRAM CALL)
...
```

The measured length is compared with the value from the tool table. The difference is written into the tool table as wear. If wear exceeds the given tolerance the cycle stops with an error message.

Tool length monitoring/breakage detection

Centric positioning

```
...
T1 M6                          (LOAD TOOL WHICH MUST BE MEASURED INTO SPINDLE)
G65 P9915 H1 B2 Q0.02          (PROGRAM CALL)
...
```

Excentric positioning (Example with ∅ 60 mm)

```
...
T1 M6                          (LOAD TOOL WHICH MUST BE MEASURED INTO SPINDLE)
G65 P9915 H1 B2 Q0.02 R30.0    (PROGRAM CALL)
...
```

The measured length is compared with the value from the tool table. If the wear exceeds the given tolerance the cycle stops with an error message.

4 Error Messages

If an error occurs error flag #108 is set and the error message, depending on the error number, is displayed. The program has to be interrupted with RESET, the cause of the error must be eliminated and the program has to be started again.

Legend:

E1	= Error Message
	= Error Description
	= Check the following points
	= Remedy / Workaround

E1	Call Parameter H undefined
	Call parameter H was not programmed. Reading / writing of tool data is not possible.
	(1) Was call parameter H programmed?
	(1) Set parameter H.

E4	Incorrect call parameter
	The measuring cycle cannot be executed with the set call parameters.
	(1) Are the call parameters H, B, Q, R and U set correctly?
	(1) Set the call parameters as described in the programming instruction.

E5	Wrong tool length / radius
	The inserted tool length or the measuring position is faulty. Hazard of collision.
	(1) Are the variables #131 or #132 in program O9917 set correctly? (2) Does the tool data exceed the limit?
	(1) Define the limits in programm O9917 correctly. (2) This tool can not be measured.

E6	Error start measuring block
	The measuring signal has a wrong level. The measuring block can not be carried out.
	(1) Is the probe wired correctly? (2) Are the measuring positions in variables #111 - #113 set correctly?
	(1) Correct wiring. (2) Check measuring positions in program O9917.

E7	Measuring block without trigger signal
	No measuring signal has been detected during the measuring block.
	(1) Is the probe wired correctly? (2) Is the tool shorter than the minimum tool length in variable #132? (3) Are the measuring positions in variables #111 -#113 set correctly?
	(1) Correct wiring. (2) Define limit in program O9917 correctly. (3) Check measuring positions in program O9917.

E8	Tool out of tolerance
	The measured tolerance exceeds the admissible wear tolerance.
	(1) Is the tool worn or broken? (2) Was the tool drawn out of the holder? (3) Are chips on the cutting edge?
	(1) Check tool data. (2) Replace tool. (3) Remove chips.

E9	Tool broken
	Wear tolerance was exceeded twice.
	(1) Is the tool broken?
	(1) Replace tool.

E10	Wrong Calibration or TC-Parameter
	The data of the calibration tool are incorrect or the calibration values differ too much from the measuring positions in the calibration cycle. Risk of collision with the probe!
	(1) Are the measuring positions in variables #111 - #113 set correctly? (2) Is the probe calibrated?
	(1) Check measuring positions in program O9917. (2) Run calibration cycle O9914.

E11	Temperature drift exceed limit
	The measured temperature drift exceeds the admissible limit..
	(1) Is the tolerance U set too small? (2) Has the machine operating temperatur?
	(1) Increase tolerance U. (2) Run machine to operating temperature.

E12	Incorrect table parameter
	With the parameters set in section 1 / program O9917 the calibration / measurement cycle can not be executed.
	(1) Are the variables in section 1 / program O9917 properly defined?
	(1) Check the input values in the following variables: #116 = Diameter probe head #125 = Number of the radius axis #126 = Approach side radius axis #129 = Safety distance over the measuring surface #130 = Maximum measuring overtravel #138 = Tool wear tolerance #139 = Start address for calibration parameters #142 = Program stop with error message #149 = Max. admissible offset at TC reference measurement

7. Big Tool Function Setting Procedure

Control: FANUC

PLC Version: B0 to B4

Definition of big tool:

If tool diameter CAT 40 > 3.149" (80mm) will be interfere each other.

So when CAT 40 tool larger than 3.149", the Adjacent pot should be empty or use smaller diameter tools. (Keep those pots empty is recommended)

When using big tool: Machine will put big tool to the original pot then change the next tool.

Big tool setting instruction:

PMC parameter D124 assigned to be big tool function. When D124 = 1, that means using one big tool and pot 1 and tool 1 should be big tool. Tool 24, 1 and 2 will be involved in the big tool function. If D124 = 5, tool 24, 1, 2, 3, 4, 5 and 6 will be involved for the big tool function. The tool 1, 3, and 5 will be big tools.

1. Reset tool table: Manually index the magazine and stop No. 1 pot to the standby position.
   The following figure is the tool table before reset.

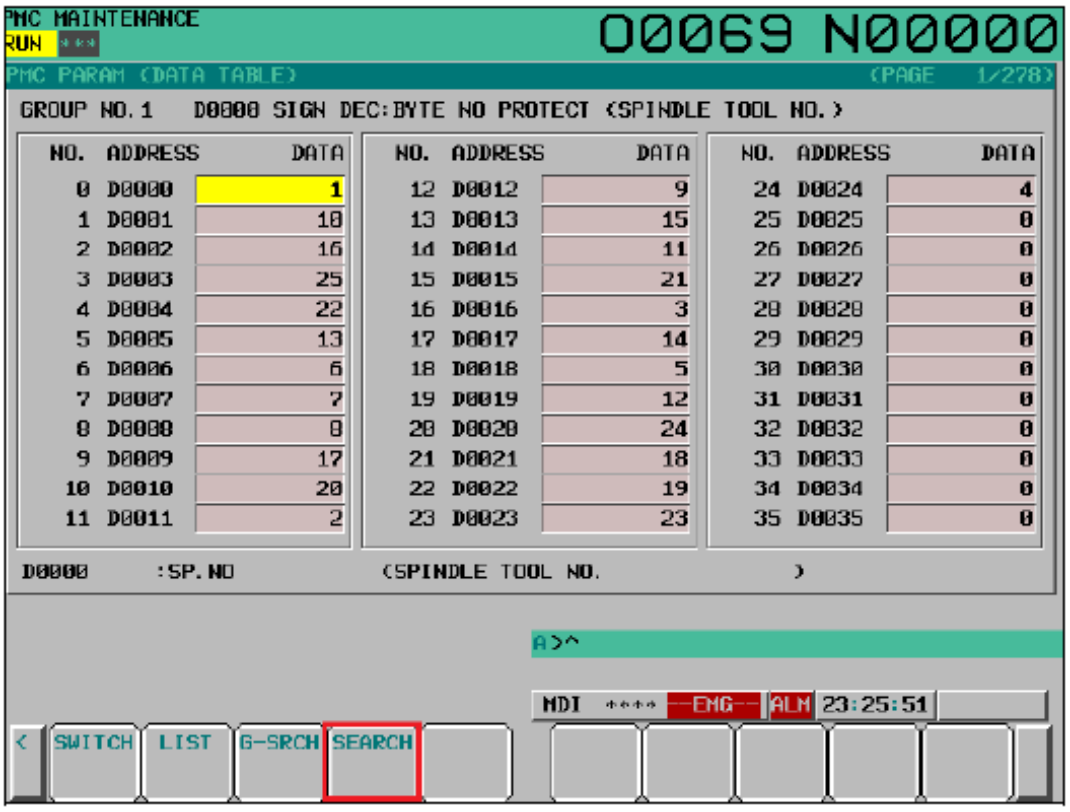

2. In MDI mode, execute M70. The tool table will be initialized. Figure below is the tool table has been reset.

1) Select ZRN operation mode

2) Press **MAGAZINE CW** push button switch

3) Magazine rotation to NO.1 tool pot position

4) Select **MDI** operation mode

5) Press **PROGRAM** function key

6) Key in **M70；**

7) Press **INSERT** key

8) Press **CYCLE START** push button switch

9) Tool table **D0~D24** reset registe

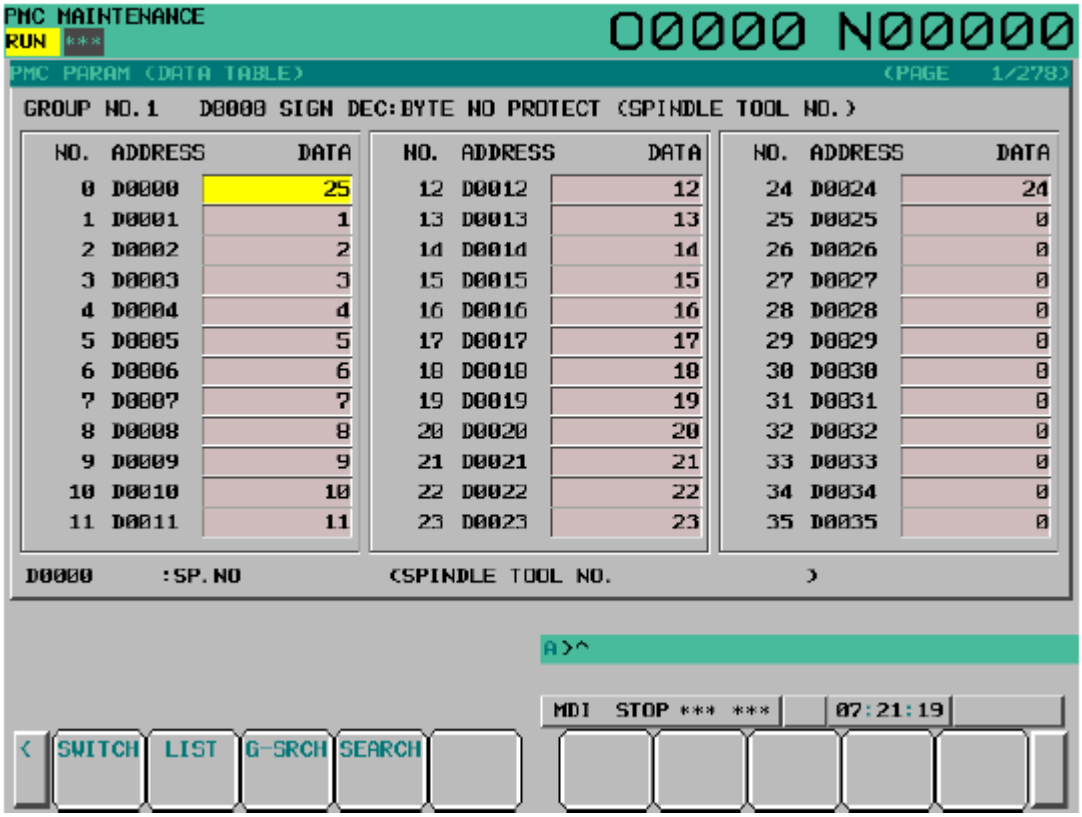

3. In MDI mode, change PWE = 1 at OFFSET/SETTING page.

Setting operation：

1) Select MDI operation mode
2) Press **OFFSET/SETING** fuction key
3) Press **SETING** softkey
4) Settinf PWE=1
5) Display " **100 PARAMETER WRITE ENABLE**" message
6) Press **SYSTEM** fuction key
7) Press **PMC** softkey
8) Press **PMCPRM** softkey
9) Press **DATA** softkey
10) Press **G.DATA** softkey
11) key in "**D124**"
12) Press **SEARCH** softkey

13) Cursor move to " **D124** " position
14) Key in "**1**"
15) Press **INPUT**

Press SYSTEM soft key on Fanuc panel to get following page.

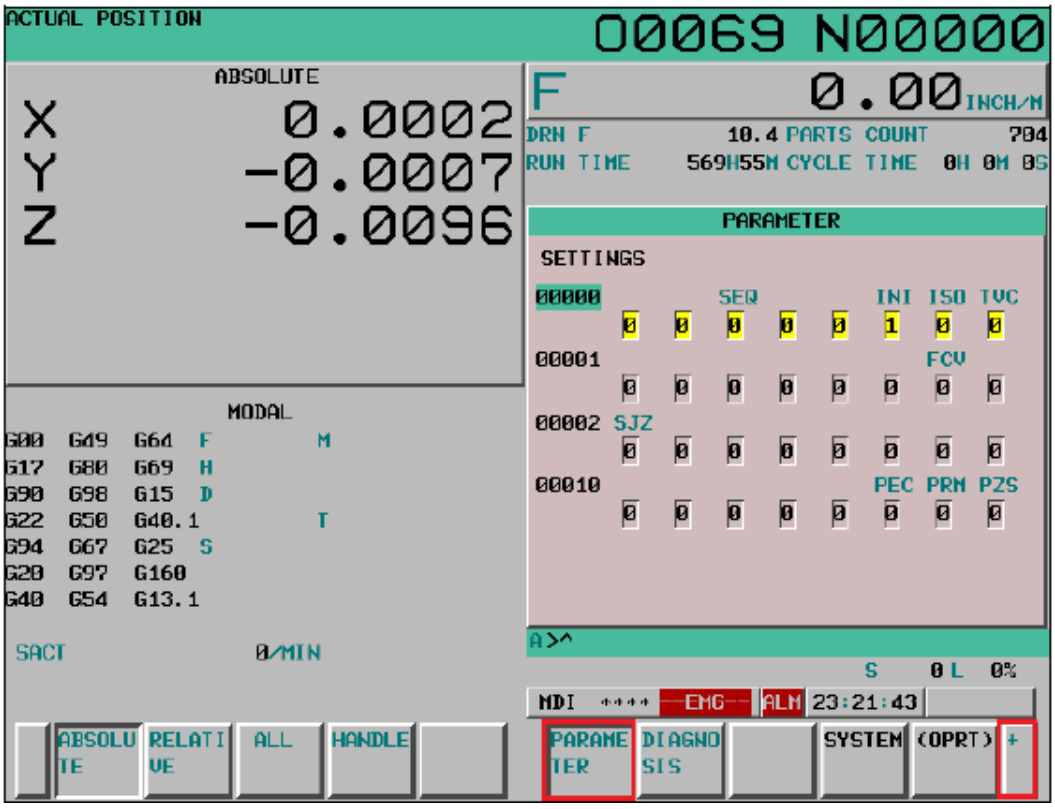

Then press + three times to find PMC MAINTE

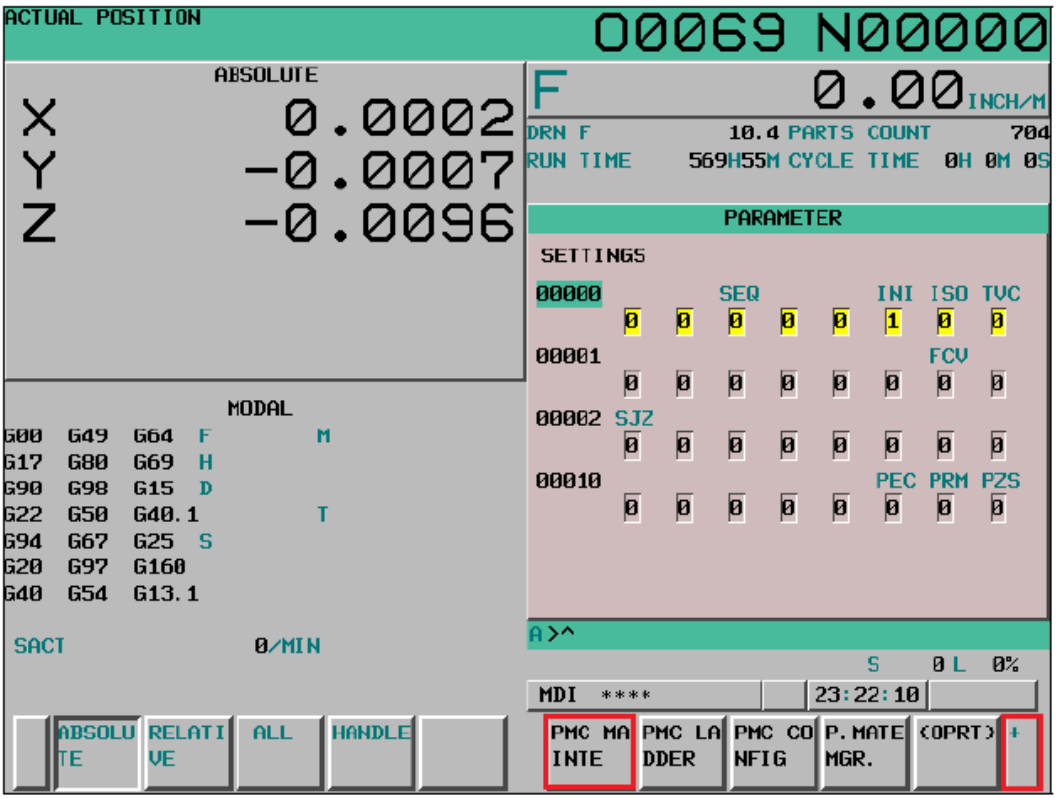

Then press + until you find DATA.

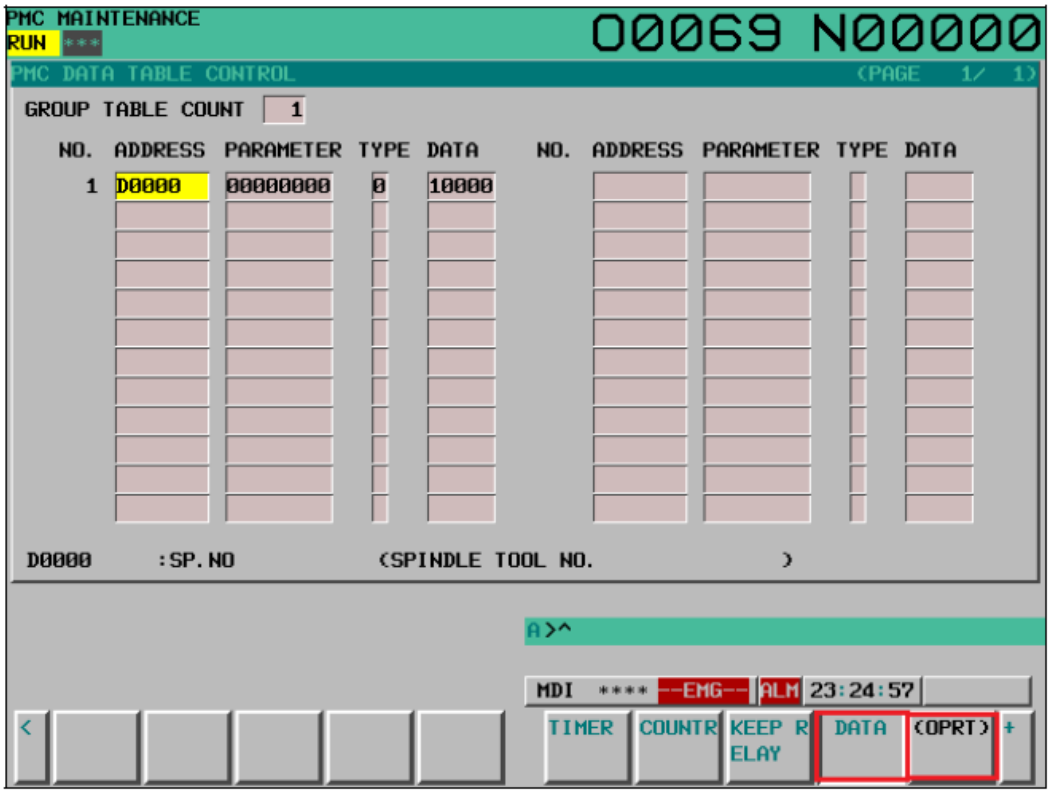

Then press OPRT to get following page.

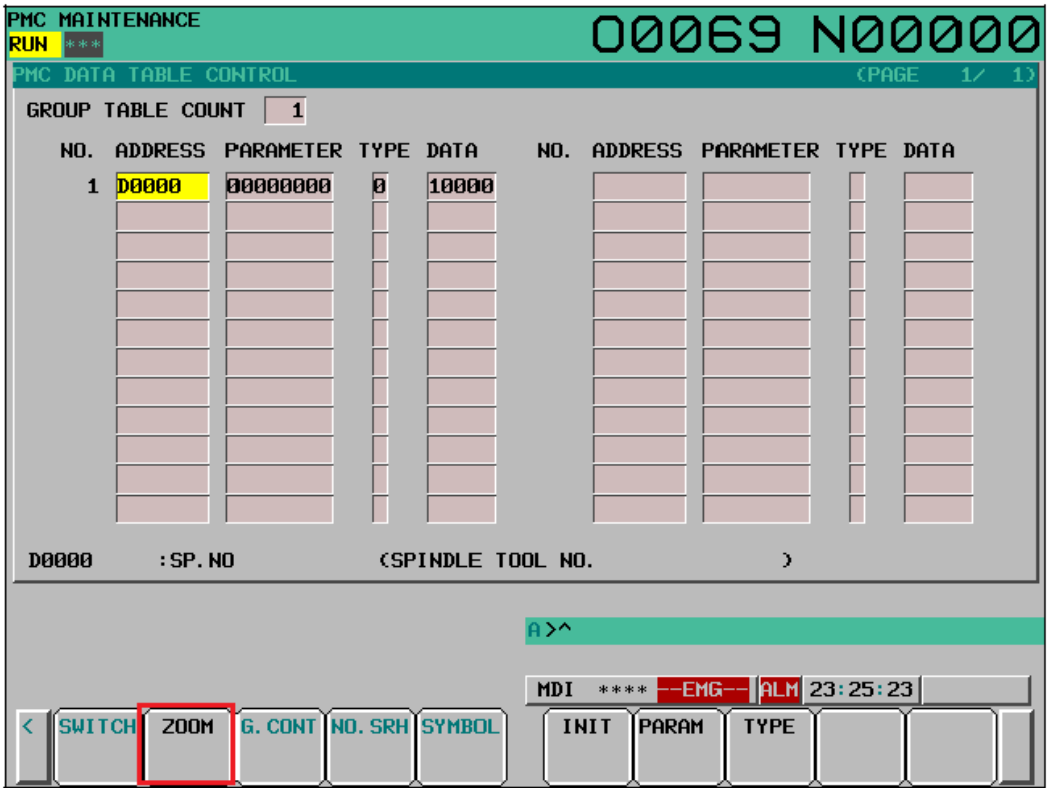

Then press ZOOM to display tool table.

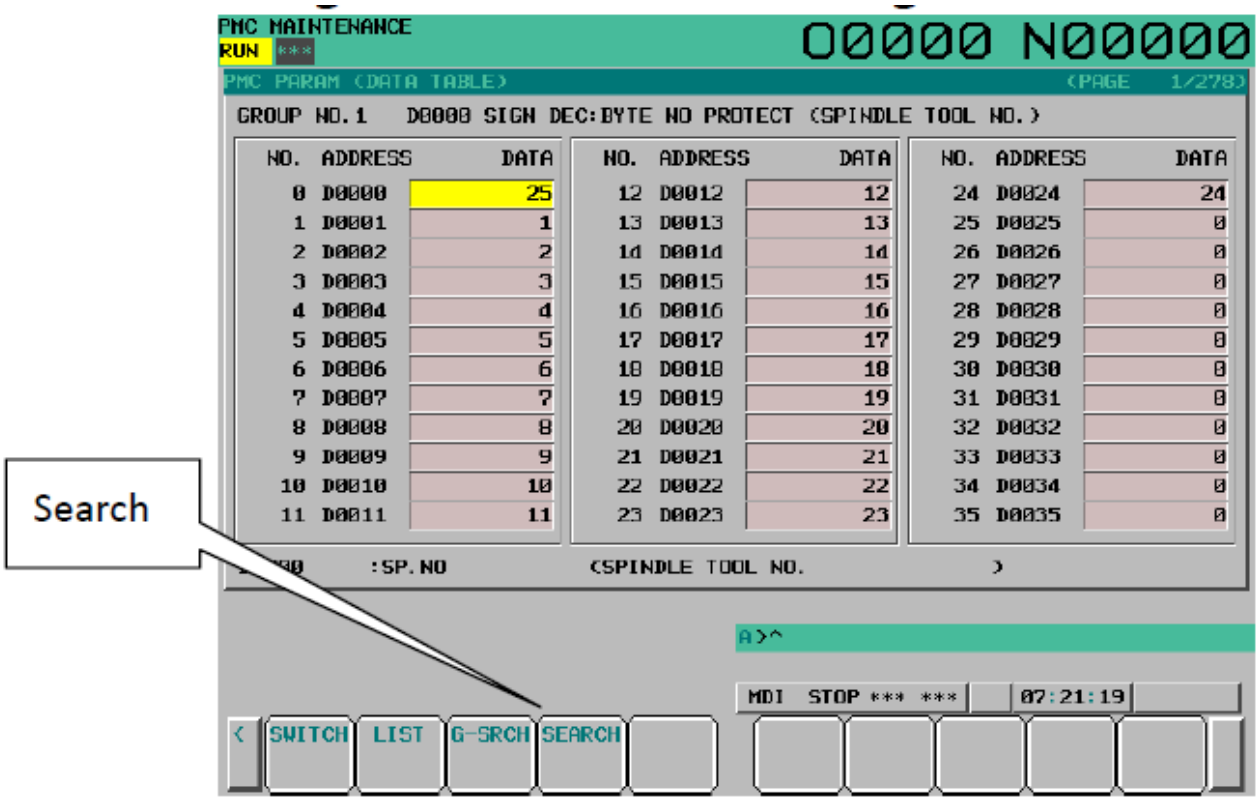

Key in D124 and press SEARCH or cursor down to D124.

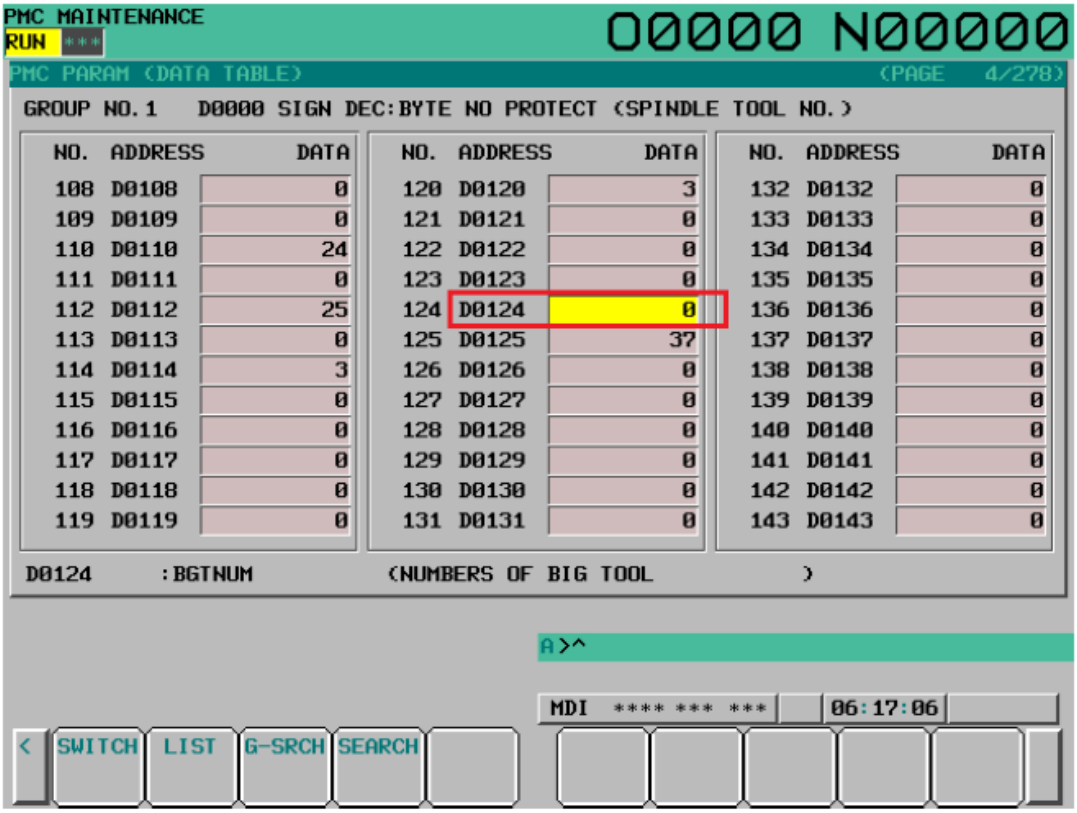

Settinf operation

1) Key in "**1**" then press **INPUT** to set **D124 = 1.**

2) Press **OFFSET/SETTING** function key

3) Press **SETTING** softkey

4) Set PWE= 0, big diameter tool data setting finish 。

Test run in MDI mode：

1) T4；

2) M6；or T4 M6；

1. Magazine will index and stop in T4.
2. ATC will change T4 to spindle. Tool # display will be 4 and tool table D0 = 4, D4 =25 (Empty pot).

Execute：

T1；

M6；

Or T1 M6;

1. Magazine will index and stop to #1 pot.
2. Magazine will index and stop to pot 4, ATC will change tool 4 to pot 4.
3. Magazine will index and stop to pot 1, ATC will change tool 1 to spindle. Tool # display will be 1 and tool table D0 = 1, D1 =25 (Empty pot).

Execute：
T24；
M6；
1. Magazine will index and stop to #24 pot.
2. Magazine will index and stop to pot 1, ATC will change tool 1 to pot 1. (Empty pot)
3. Magazine will index and stop to pot 24, ATC will change tool 24 to spindle. Tool # display will be 24, and tool table D0 = 24, D1 = 1.